12-22-80
GILMORE

CON HEX®

Subminiature R.F. Connectors

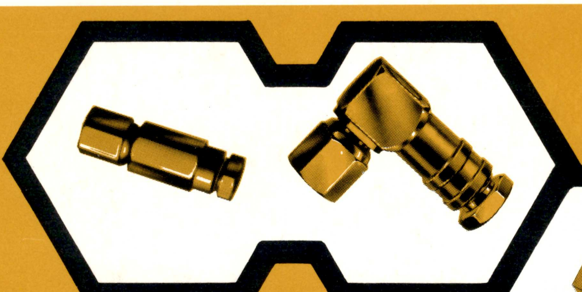

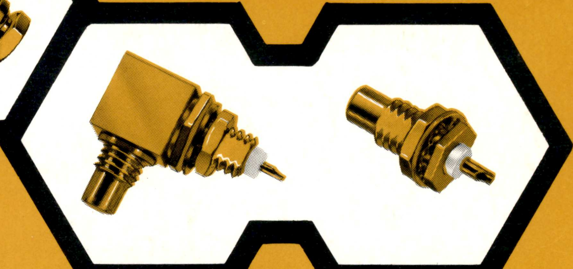

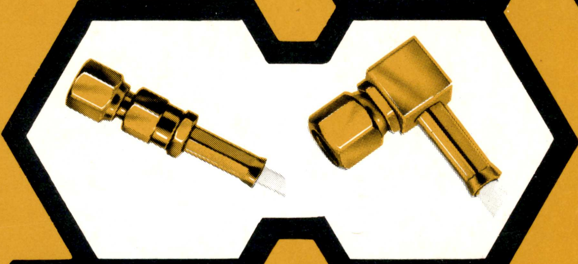

* TELESCOPING INTERFACE
* SCREW-ON, SNAP-ON AND SLIDE-ON
* MIL-C-39012, SERIES SMB AND SMC
* 50Ω OR 75Ω IMPEDANCE
* FIVE CABLE ATTACHMENTS

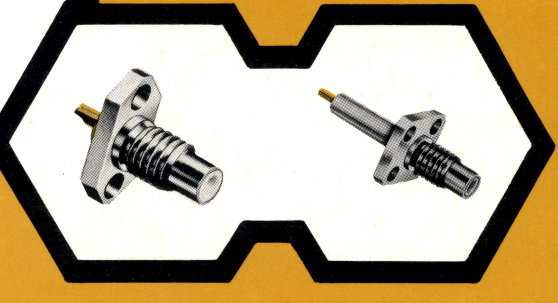

SEALECTRO®

RF COMPONENTS DIVISION

SEALECTRO CORPORATION

MAMARONECK, N. Y. 10543 PHONE 914-698-5600 TWX 710-566-1110

SEALECTRO WEST.

14011 Ventura Blvd.
Suite 215
Sherman Oaks, Ca. 91423
Phone 213-990-8131

1901 Old Middlefield Way
Suite 19
Mountain View, Ca. 94043
Phone 415-965-1212

SEALECTRO LTD.

Walton Road
Portsmouth, Hants, England

SEALECTRO S.A.

Zone Industrielle De Toulon Est.
83087 Toulon Cedex, France

FEDERAL SUPPLY CODE 98291

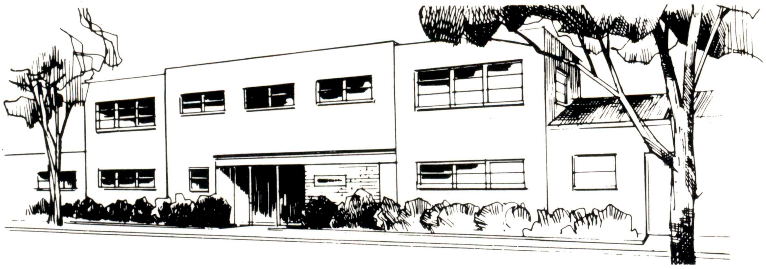

MAMARONECK, NEW YORK

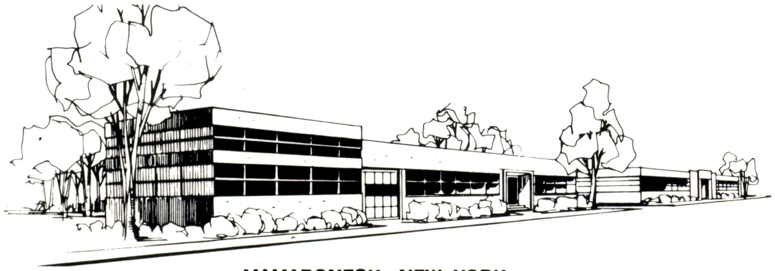

MAMARONECK, NEW YORK

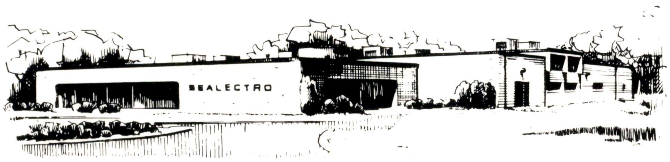

WATERTOWN, CONNECTICUT

La GARDE, FRANCE

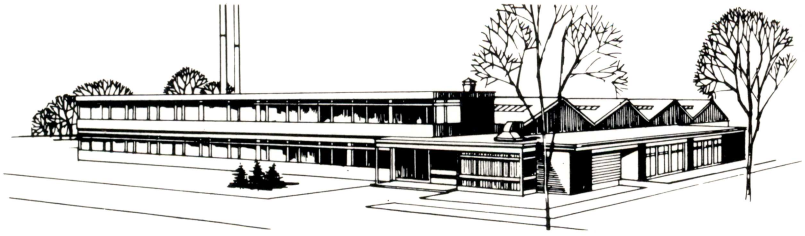

PORTSMOUTH, ENGLAND

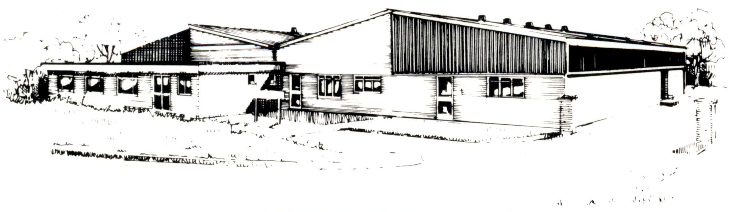

ANDOVER, ENGLAND

SEALECTRO

. . . WORLD LEADER IN R.F. CONNECTORS

Sealectro is known throughout the world as the leader in rf connectors. Complete facilities for the design, development and manufacture of these devices are housed in modern plants in Mamaroneck, New York and Waterbury, Connecticut in the U.S.A. In addition, parallel facilities are operated in the United Kingdom and France, in order to serve the European Markets with the same fine quality products.

— WARRANTY —

Sealectro warrants products of its manufacture to be free from defects in material and workmanship under conditions of normal use. If within one year after delivery to the original owner and after prepaid return by the original owner, any Sealectro product is found to be defective, Sealectro shall at its option repair or replace said defective item. This warranty does not apply to products that have been disassembled, modified or subjected to conditions exceeding the applicable specifications or ratings. Sealectro reserves the right to make design changes without notice on any of its products without any obligation to make same or similar changes to items previously purchased. In no event does Sealectro assume liability for installation labor or for consequential damages. This warranty is the extent of the obligation or liability assumed by Sealectro with respect to its products, and no other warranty or guarantee is either expressed or implied.

Copyright 1979, by SEALECTRO CORPORATION
All Rights Reserved

The text and illustrative matter in this publication or any part thereof may not be reproduced in any manner whatsoever without written permission from Sealectro Corporation

The SMA, SMA-OPL, CONHEX, NANOHEX, Z, KWK and KWICK-KONNECT are registered trademarks.

INTRODUCTION

"ConheX" Connectors are renowned throughout the world for uniformly high quality products for the electronics industry. In order to maintain this performance, Sealectro is a self-contained organization with complete design, development, manufacturing and test facilities. These facilities, backed by stringent quality control procedures during every step of manufacturing and assembly, assure you of maximum value, reliability and performance in every product. Sealectro maintains a test facility which is fully qualified as a MIL-C-39012 test laboratory.

TABLE OF CONTENTS

Note: 50 ohm connectors are shown on pages 12 through 33.
75 ohm connectors are shown on pages 34 through 49.
Pages 50 through 59 contain general information and other information pertaining to both 50 and 75 ohm units.

	General	50 ohm	75 ohm
Accessories			
Dust Caps		51	51
Shorting Plugs		51	51
Float Mounting Hardware	53		
Adaptors			
In-Series			
Plug to Plug		33	48
Plug to Jack		32	48
Jack to Jack		32	49
Jack-Jack-Jack "T"		29	45
Plug-Plug-Plug "T"		29	45
Jack-Plug-Jack "T"		30	47
Plug-Jack-Plug "T"		30	47
Between-Series	59		
Application Data	6		
Assembly Instructions	55		
Attenuators		50	
Cable Assemblies			
Standard	52		
Custom	52		
Cable Connectors			
Plugs, Cable			
Clamp-Type for Braided Coax		12	34
Clamp-Type for Semi-Rigid Coax		14	
Crimp-Type for Braided Coax		18	36
Solder-Clamp-Type for Semi-Rigid Coax		14	
Direct Solder for Semi-Rigid Coax		16	
Jacks, Cable			
Clamp-Type for Braided Coax		13	35
Clamp-Type for Semi-Rigid Coax		15	
Crimp-Type for Braided Coax		19	37
Solder-Clamp-Type for Semi-Rigid Coax		15	
Junction Blocks, Cable			
Clamp-Type for Braided Coax		31	46
Crimp-Type for Braided Coax		31	46
Cable Selection Guide		11	11
Chassis Hole Dimensions	53		
Conversion Tables	56		
Crimp Tools	55		
Design Features	8		
Electrical Specifications	7		
Environmental Specifications	7		
Filters, High Frequency, Low Pass		50	
Float-mounts	53		
Interface Gaskets	54		
Guided Entry Sleeve	54		
Insulated Panel Mount	54		
Lockwire Holes	54		
Material Specifications	7		
Mechanical Specifications	7		
Microwave Components		50	
Mounting Information	53		
N, BNC, TNC Connectors	59		
NanoheX Series	58		
Panel Hole Dimensions	53		
P/N to Page Number Index	4		
Plating Options	54		
Positive Lock		17	38
Printed Circuit Connectors		24	42
Printed Circuit Mounting Holes	53		
QPL to MIL-C-39012	5		
Receptacles			
Plugs			
Bulkhead Mounting		20	40
Printed Circuit Mounting		24	42
Jacks			
Flange Mounting		22	
Bulkhead Mounting		21	39
Recessed Bulkhead Mounting		25	41
Printed Circuit Mounting		24	42
Hermetically Sealed		28	44
Specifications	7		
SMA Series	58		
Stripline Connectors		26	
Terminations			
Resistive		51	51
Precision		50	
Tooling	55		
Torque Wrenches	55		
Torque Values		55	55
Typical Construction	8	8	8
Warranty	2		
Z Series	59		

See specific part number index on page 4.

P/N TO PAGE NUMBER INDEX

PART NUMBER	PAGE
50 SERIES	
50-000-0000	55
50-000-0090	55
50-000-0091	55
50-000-0290	55
50-000-0291	55
50-000-0292	55
50-000-0293	55
50-000-0294	55
50-000-0295	55
50-000-0854-08	55
50-000-0854-09	55
50-000-1854-10	55
50-000-1854-13	55
50-000-2854-08	55
50-000-2854-09	55
50-000-4854-12	55
50-000-4854-14	55
50-000-6854-12	55
50-001-0010	51
50-001-0020	51
50-007-0000	12
50-007-2710	54
50-007-3196	12
50-007-3701	14
50-007-3702	14
50-007-3703	14
50-007-9701	14
50-007-9702	14
50-007-9703	14
50-008-0000	13
50-008-3196	13
50-008-3701	15
50-008-3702	15
50-008-3703	15
50-008-9701	15
50-008-9702	15
50-008-9703	15
50-009-0000	12
50-009-3196	12
50-009-3701	14
50-009-3702	14
50-009-3703	14
50-009-9701	14
50-009-9702	14
50-009-9703	14
50-010-0000	13
50-010-3196	13
50-010-3701	15
50-010-3702	15
50-010-3703	15
50-010-9701	15
50-010-9702	15
50-010-9703	15
50-011-3701	14
50-011-3702	14
50-011-3703	14
50-011-9701	14
50-011-9702	14
50-011-9703	14
50-012-0000	13
50-012-3196	13
50-012-3701	15
50-012-3702	15
50-012-3703	15
50-012-9701	15
50-012-9702	15
50-012-9703	15
50-024-0000	18
50-024-3196	18
50-025-0000	19
50-025-2010	54
50-025-3196	19
50-026-0000	18
50-026-3196	18
50-027-0000	19
50-027-3196	19
50-030-0000	19
50-030-3196	19
50-043-0000	21
50-043-7000	28
50-044-0000	20
50-045-0000	21
50-045-7000	28
50-045-4504-89	23
50-045-4508-89	23
50-045-4510-89	23
50-045-4518-89	23
50-045-4520-89	23
50-045-4524-89	23
50-045-4528-89	23
50-045-9310-89	22
50-045-9320-89	22
50-045-9330-89	22
50-045-9340-89	22
50-045-9350-89	22
50-046-0000	20
50-047-0000	21
50-047-4504-89	23
50-047-9340-89	22
50-048-0000	20
50-051-0000	24
50-052-0000	24
50-053-0000	24
50-054-0000	24
50-056-2210	26
50-056-2211	26
50-056-2212	26
50-056-2213	26
50-056-2214	26
50-056-2215	26
50-058-2210	26
50-058-2211	26
50-058-2212	26
50-058-2213	26
50-058-2214	26
50-058-2215	26
50-059-2210	27
50-059-2212	27
50-059-2214	27
50-062-2210	27
50-062-2212	27
50-062-2214	27
50-067-0000	31
50-068-0000	31
50-070-0000	31
50-071-0000	31
50-072-0000	32
50-073-0000	33
50-075-0000	32
50-075-7000	28
50-076-0000	33
50-077-0000	32
50-078-0000	33
50-083-0000	29
50-084-0000	29
50-085-0000	30
50-086-0000	30
50-101-0010	51
50-101-0020	51
50-107-0000	34
50-108-0000	35
50-109-0000	34
50-110-0000	35
50-111-9511	34
50-112-0000	35
50-124-0000	36
50-125-0000	37
50-126-0000	36
50-127-0000	37
50-128-9511	36
50-130-0000	37
50-143-0000	39
50-143-7000	44
50-144-0000	40
50-145-0000	39
50-145-7000	44
50-146-0000	40
50-147-0000	39
50-148-0000	40
50-151-0000	42
50-153-0000	42
50-167-0000	46
50-170-0000	46
50-171-0000	46
50-172-0000	49
50-173-0000	48
50-175-0000	49
50-175-7000	44
50-177-0000	49
50-178-0000	48
50-183-0000	45
50-184-0000	45
50-185-0000	47
50-186-0000	47
50-307-9072	16
50-308-9072	16
50-311-3188	12
50-311-3196	12
50-311-9072	16
50-328-3188	18
50-328-3196	18
51 SERIES	
51-001-0010	51
51-001-0020	51
51-007-0000	12
51-007-3196	12
51-008-0000	13
51-008-3196	13
51-009-0000	12
51-009-3196	12
51-010-0000	13
51-010-3196	13
51-012-0000	13
51-012-3196	13
51-015-0000	25
51-024-0000	18
51-024-3196	18
51-025-0000	19
51-025-3196	19
51-026-0000	18
51-026-3196	18
51-027-0000	19
51-027-3196	19
51-030-0000	19
51-030-3196	19
51-033-0000	25
51-043-0000	21
51-043-7000	28
51-044-0000	20
51-045-0000	21
51-045-7000	28
51-045-4504-89	23
51-045-4508-89	23
51-045-4518-89	23
51-045-4520-89	23
51-045-4524-89	23
51-045-4528-89	23
51-045-9310-89	22
51-045-9320-89	22
51-045-9321-89	22
51-045-9330-89	22
51-045-9340-89	22
51-045-9350-89	22
51-046-0000	20
51-047-0000	21
51-047-9340-89	22
51-048-0000	20
51-049-0000	25
51-051-0000	24
51-052-0000	24
51-053-0000	24
51-054-0000	24
51-056-2210	26
51-056-2211	26
51-056-2212	26
51-056-2213	26
51-056-2214	26
51-056-2215	26
51-058-2210	26
51-058-2211	26
51-058-2212	26
51-058-2213	26
51-058-2214	26
51-058-2215	26
51-059-2210	27
51-059-2212	27
51-059-2214	27
51-062-2210	27
51-062-2212	27
51-062-2214	27
51-068-0000	31
51-070-0000	31
51-071-0000	31
51-072-0000	32
51-073-0000	33
51-075-0000	32
51-075-7000	28
51-076-0000	33
51-077-0000	32
51-078-0000	33
51-083-0000	29
51-084-0000	29
51-085-0000	30
51-086-0000	30
51-101-0010	51
51-101-0020	51
51-107-0000	34
51-108-0000	35
51-109-0000	34
51-110-0000	35
51-111-9511	34
51-112-0000	35
51-115-0000	41
51-124-0000	36
51-124-1195	38
51-125-0000	37
51-126-0000	36
51-127-0000	37
51-128-1195	38
51-128-9511	36
51-130-0000	37
51-133-0000	41
51-143-0000	39
51-143-7000	44
51-144-0000	40
51-145-0000	39
51-145-7000	44
51-146-0000	40
51-147-0000	39
51-148-0000	40
51-149-0000	41
51-151-0000	42
51-152-0000	42
51-153-0000	42
51-154-0000	42
51-167-0000	46
51-170-0000	46
51-171-0000	46
51-172-0000	49
51-173-0000	48
51-175-0000	49
51-175-7000	44
51-177-0000	49
51-178-0000	48
51-183-0000	45
51-184-0000	45
51-185-0000	47
51-186-0000	47
51-311-3188	12
51-311-3196	12
51-324-1188	17
51-324-1196	17
51-328-1188	17
51-328-1196	17
51-328-3188	18
51-328-3196	18
52 SERIES	
52-001-0010	51
52-001-0020	51
52-007-0000	12
52-007-3196	12
52-008-0000	13
52-008-3196	13
52-009-0000	12
52-009-3196	12
52-010-0000	13
52-010-3196	13
52-012-0000	13
52-012-3196	13
52-015-0000	25
52-024-0000	18
52-024-3196	18
52-025-0000	19
52-025-3196	19
52-026-0000	18
52-026-3196	18
52-027-0000	19
52-027-3196	19
52-030-0000	19
52-030-3196	19
52-033-0000	25
52-043-0000	21
52-044-0000	20
52-045-0000	21
52-046-0000	20
52-047-0000	21
52-048-0000	20
52-049-0000	25
52-051-0000	24
52-052-0000	24
52-053-0000	24
52-054-0000	24
52-059-2210	27
52-059-2212	27
52-059-2214	27
52-072-0000	32
52-073-0000	33
52-075-0000	32
52-076-0000	33
52-077-0000	32
52-078-0000	33
52-083-0000	29
52-084-0000	29
52-085-0000	30
52-086-0000	30
52-101-0010	51
52-101-0020	51
52-107-0000	34
52-108-0000	35
52-109-0000	34
52-110-0000	35
52-111-9511	34
52-112-0000	35
52-124-0000	36
52-125-0000	37
52-126-0000	36
52-127-0000	37
52-128-9511	36
52-130-0000	37
52-143-0000	39
52-144-0000	40
52-145-0000	39
52-146-0000	40
52-147-0000	39
52-148-0000	40
52-151-0000	42
52-152-0000	42
52-153-0000	42
52-154-0000	42
52-173-0000	48
52-178-0000	48
52-311-3188	12
52-311-3196	12
52-328-3188	18
52-328-3196	18
60 SERIES	
60-001-0000-89	50
60-001-0101	51
60-001-0102	51
60-001-0501	51
60-001-0502	51
60-001-0518	51
60-001-0900	51
60-002-0000-89	50
60-043-2039	50
60-074-1003	50
60-074-1006	50
60-074-1010	50
60-074-1020	50
60-101-0101	51
60-101-0102	51
60-101-0501	51
60-101-0502	51
60-101-0518	51
60-101-0900	51
61 SERIES	
61-001-0000-89	50
61-001-0101	51
61-001-0102	51
61-001-0501	51
61-001-0502	51
61-001-0518	51
61-001-0900	51
61-101-0101	51
61-101-0102	51
61-101-0501	51
61-101-0502	51
61-101-0518	51
61-101-0900	51
61-002-0000-89	50
62 SERIES	
62-001-0000-89	50
69 SERIES	
69-188-1250	52
69-188-1251	52
69-188-1252	52
69-188-1253	52
69-188-1254	52
69-188-1255	52
69-188-1256	52
69-188-1257	52
69-188-1258	52
69-188-1259	52
69-188-1260	52
69-188-1261	52
69-188-1262	52
69-188-1263	52
69-188-1264	52
69-188-1265	52
69-188-1266	52
69-188-1267	52
69-188-1268	52
69-188-1269	52
69-188-1270	52
69-188-1271	52
69-188-1272	52
69-188-1273	52
69-188-1274	52
69-188-1275	52
69-188-1276	52
69-188-1277	52
69-188-1278	52
69-188-1279	52
69-188-1280	52
69-188-1281	52
69-188-1282	52
69-188-1283	52
69-188-1284	52
69-188-1285	52
69-188-1286	52
69-188-1287	52
69-188-1288	52
69-188-1289	52
69-188-1290	52
69-188-1291	52
69-188-1292	52
69-188-1293	52
69-188-1294	52
69-188-1295	52
69-188-1296	52
69-188-1297	52
69-188-1298	52
69-188-1299	52
69-188-1300	52
69-188-1301	52
69-188-1302	52
69-188-1303	52
69-188-1304	52
69-188-1305	52
69-188-1306	52
69-188-1307	52
69-188-1308	52
69-188-1309	52

SMB-QPL

SMC-QPL

QPL UNITS TO MIL-C-39012 SERIES SMB and SMC

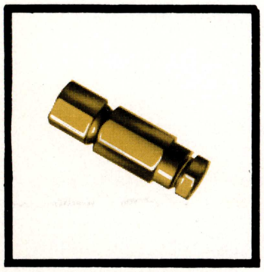

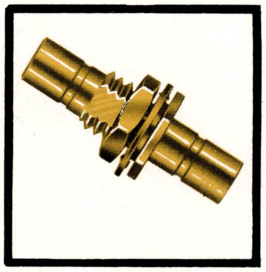

MIL-C-39012 is a performance oriented specification that defines the inter-face dimensions, maximum diameters, maximum over-all lengths, and mounting dimensions of each series. As Qualification Inspection is required in order to receive Qualification Approval, and Quality Conformance inspections are required on each lot produced, the cost of the QPL item is usually slightly more than the CONHEX catalog equivalent.

Sealectro's "SMB-SMC" Series offers you the widest choice of subminiature connectors in the industry. More than 80 items have received full Qualification Approval to MIL-C-39012 and are listed below. Because of their popularity, most of the items are likely to be found in stock at the factory, or one of our many authorized distributors.

Center Contacts are plated .0001 min. Gold per MIL-G-45204B Type 1, Grade C, Class 2, over .000005 Gold per MIL-G-45204B Type 1, Grade A over .0001 min. copper per MIL-C-14550 Class 4. All Other Metal Parts: Gold plated to meet the finish and corrosion requirements of MIL-C-39012.

The two most popular categories for braided cable connectors are indicated on the chart below and are generically described as follows:

Category A (CLAMP TYPE) Connectors which do not require special tools to assemble to cable. Also called field serviceable and field repairable.

Category B (CRIMP TYPE) Connectors which may require the use of special tools to assemble.

MIL-C-39012 PT. NUMBER	CAT.	SEALECTRO PT. NUMBER	MIL-C-39012 PT. NUMBER	CAT.	SEALECTRO PT. NUMBER	MIL-C-39012 PT. NUMBER	CAT.	SEALECTRO PT. NUMBER
M39012/67-0001	A	51-307-6701-229	M39012/69-0010	B	51-328-6910-229	M39012/74-0007	B	50-325-7407-229
M39012/67-0002	A	51-307-6702-229	M39012/70-0001	A	51-310-7001-229	M39012/74-0008	B	50-325-7408-229
M39012/67-0003	A	51-307-6703-229	M39012/70-0002	A	51-310-7002-229	M39012/74-0009	B	50-325-7409-229
M39012/67-0004	A	51-307-6704-229	M39012/70-0003	A	51-310-7003-229	M39012/74-0010	B	50-325-7410-229
M39012/67-0005	B	51-324-6705-229	M39012/70-0004	A	51-310-7004-229	M39012/75-0001	A	50-311-7501-229
M39012/67-0006	B	51-324-6706-229	M39012/70-0005	B	51-327-7005-229	M39012/75-0002	A	50-311-7502-229
M39012/67-0007	B	51-324-6707-229	M39012/70-0006	B	51-327-7006-229	M39012/75-0003	A	50-311-7503-229
M39012/67-0008	B	51-324-6708-229	M39012/70-0007	B	51-327-7007-229	M39012/75-0004	A	50-311-7504-229
M39012/67-0009	B	51-324-6709-229	M39012/70-0008	B	51-327-7008-229	M39012/75-0005	B	50-328-7505-229
M39012/67-0010	B	51-324-6710-229	M39012/70-0009	B	51-327-7009-229	M39012/75-0006	B	50-328-7506-229
M39012/68-0001	A	51-308-6801-229	M39012/70-0010	B	51-327-7010-229	M39012/75-0007	B	50-328-7507-229
M39012/68-0002	A	51-308-6802-229	M39012/71-0001	—	51-043-7101-229	M39012/75-0008	B	50-328-7508-229
M39012/68-0003	A	51-308-6803-229	M39012/71-0002	—	51-045-7102-229	M39012/75-0009	B	50-328-7509-229
M39012/68-0004	A	51-308-6804-229	M39012/73-0001	A	50-307-7301-229	M39012/75-0010	B	50-328-7510-229
M39012/68-0005	B	51-325-6805-229	M39012/73-0002	A	50-307-7302-229	M39012/76-0001	A	50-310-7601-229
M39012/68-0006	B	51-325-6806-229	M39012/73-0003	A	50-307-7303-229	M39012/76-0002	A	50-310-7602-229
M39012/68-0007	B	51-325-6807-229	M39012/73-0004	A	50-307-7304-229	M39012/76-0003	A	50-310-7603-229
M39012/68-0008	B	51-325-6808-229	M39012/73-0005	B	50-324-7305-229	M39012/76-0004	A	50-310-7604-229
M39012/68-0009	B	51-325-6809-229	M39012/73-0006	B	50-324-7306-229	M39012/76-0005	B	50-327-7605-229
M39012/68-0010	B	51-325-6810-229	M39012/73-0007	B	50-324-7307-229	M39012/76-0006	B	50-327-7606-229
M39012/69-0001	A	51-311-6901-229	M39012/73-0008	B	50-324-7308-229	M39012/76-0007	B	50-327-7607-229
M39012/69-0002	A	51-311-6902-229	M39012/73-0009	B	50-324-7309-229	M39012/76-0008	B	50-327-7608-229
M39012/69-0003	A	51-311-6903-229	M39012/73-0010	B	50-324-7310-229	M39012/76-0009	B	50-327-7609-229
M39012/69-0004	A	51-311-6904-229	M39012/74-0001	A	50-308-7401-229	M39012/76-0010	B	50-327-7610-229
M39012/69-0005	B	51-328-6905-229	M39012/74-0002	A	50-308-7402-229	M39012/77-0001	—	50-043-7701-229
M39012/69-0006	B	51-328-6906-229	M39012/74-0003	A	50-308-7403-229	M39012/77-0002	—	50-045-7702-229
M39012/69-0007	B	51-328-6907-229	M39012/74-0004	A	50-308-7404-229	M39012/95-0001	—	51-051-9501-229
M39012/69-0008	B	51-328-6908-229	M39012/74-0005	B	50-325-7405-229	M39012/96-0001	—	51-053-9601-229
M39012/69-0009	B	51-328-6909-229	M39012/74-0006	B	50-325-7406-229			

50 & 75 OHM INTERFACES

Screw-On 50-Ohm (SMC)

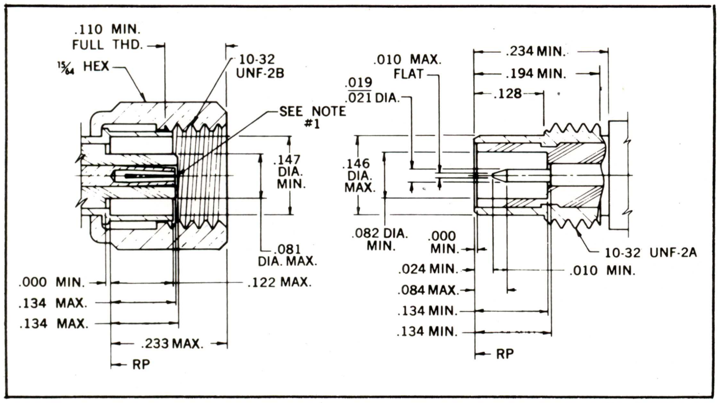

Screw-On 75-Ohm

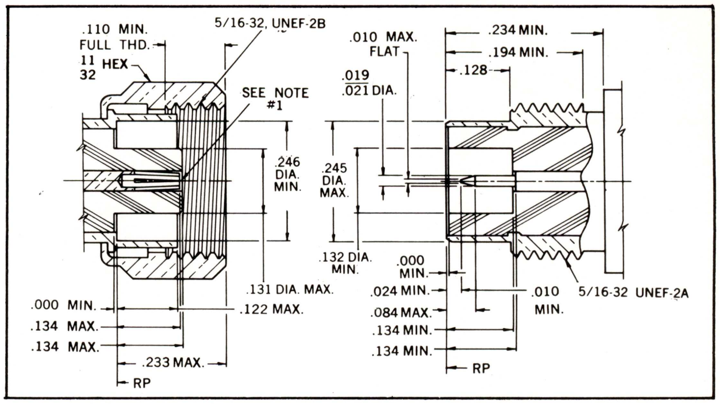

Screw-On ConheX connectors are used where a positive mechanical engagement is required and space permits the use of wrenches. The 50-Ohm version is the MIL-C-39012, Series SMC and is the smallest military approved threaded coaxial connector.

Snap-On 50-Ohm (SMB)

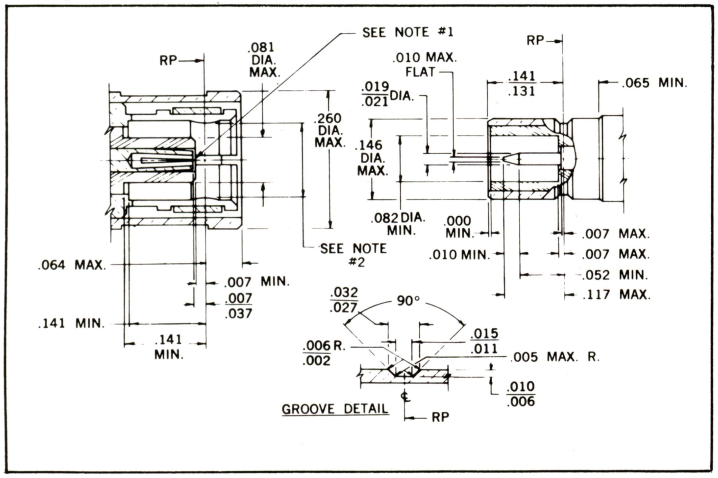

Snap-On 75-Ohm

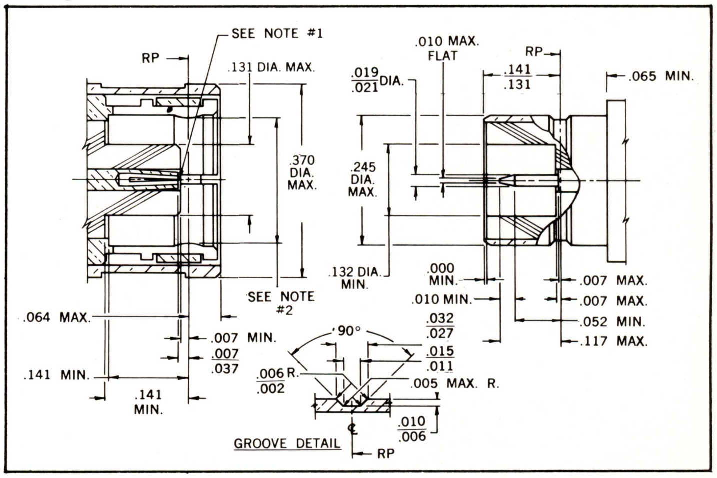

Snap-On ConheX connectors are quick-disconnect versions of the Screw-On version above. They are used in applications where limited space prohibits the use of wrenches, or where quick connection changes must be made. The 50-Ohm version is the MIL-C-39012, Series SMB.

Slide-On 50-Ohm

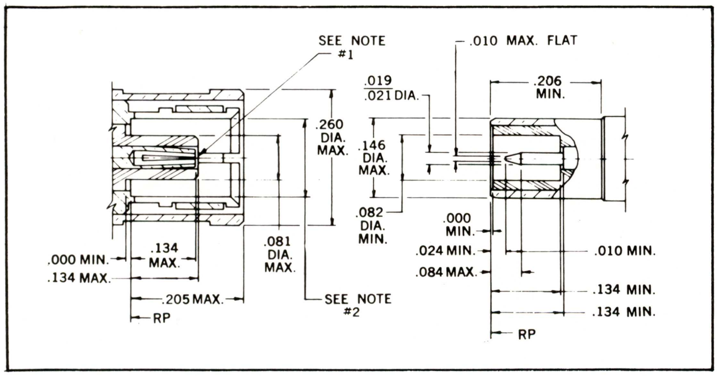

Slide-On 75-Ohm

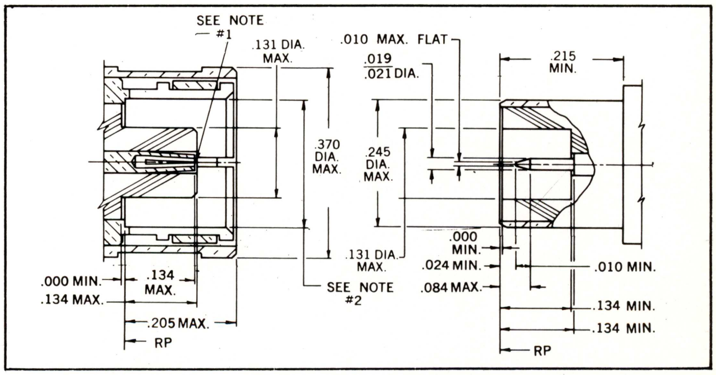

Slide-On ConheX connectors are used for rack-and-panel applications or in high density assemblies which require blind mating. This design is usually used in assemblies which provide an external means of keeping connectors in mated condition such as clamps or mounting studs.

1. Inside diameter of contact to meet VSWR, mating characteristics and connector durability when mated with a .019-.021" diameter male contact.
2. Must meet the force to engage and disengage when mated with its mating part.
3. All undimensioned pictorial representations are for reference purposes only.

"CONHEX" SPECIFICATIONS

50 OHM AND 75 OHM

"ConheX" subminiature connectors meet or exceed the requirements of MIL-C-39012, Series SMB and SMC. These specifications apply to the standard catalog items and are subject to change to comply with changes in MIL-C-39012.

ELECTRICAL

Impedance: 50 ohms and 75 ohms, nominal

Frequency Range: 0 to 10.0 GHz

Voltage Rating (VRMS):

	Sea Level	70K Feet
50 Ω connectors for RG-196/U series cable	300	75
50 Ω connectors for RG-188/U series cable	400	100
75 Ω connectors for RG-195/U series cable	500	125

Insulation Resistance: 1000 megohms min.

Contact Resistance: (milliohms max.)	Initial	After Environment
Center contact	6.0	8.0
Outer contact	1.0	1.5
Braid to body	1.0	N/A

Contact Current Rating: 1.5 amps DC max.

Voltage Standing Wave Ratio (VSWR):*

To 10 GHz or 80% of upper cutoff frequency of the cable, whichever is lower.

F = GHz CABLE	MATING ENGAGEMENT			
	Snap-On (SMB)		Screw-On (SMC)	
	STRAIGHT	RT. ANGLE	STRAIGHT	RT. ANGLE
RG-196/U Series	1.30+.04F	1.45+.06F	1.25+.04F	1.40+.06F
RG-188/U Series	1.25+.04F	1.35+.04F	1.20+.04F	1.30+.04F

Dielectric Withstanding Voltage (DWV):

	VRMS @ Sea Level
50 Ω connectors for RG-196/U series cable	1000
50 Ω connectors for RG-188/U series cable	1500
75 Ω connectors for RG-195/U series cable	2000

Corona Level:

	Volts @ 70K Feet
50 Ω connectors for RG-196/U series cable,	250 minimum
50 Ω connectors for RG-188/U series cable,	350 minimum
75 Ω connectors for RG-195/U series cable,	400 minimum

R.F. High Potential Withstanding Voltage:

Frequency: 5 MHZ

Leakage current: N/A

50 Ω connectors for RG-196/U series cable,	675 VRMS
50 Ω connectors for RG-188/U series cable,	950 VRMS
75 Ω connectors for RG-195/U series cable,	1225 VRMS

R.F. Leakage:

Screw-On -60 dB min. @ 2-3 GHz.
Snap-On and Slide-On - - - - - - - - - - - - -55 dB min. @ 2-3 GHz.

Insertion Loss:* - - - - - - - - - - - - - - .25 dB maximum @ 4 GHz.

MECHANICAL

Materials:

Body, Body Components and Male Contacts: Brass, half hard, per QQ-B-626, Alloy 360.
Female Contacts: Beryllium copper per QQ-C-530, heat treated per MIL-H-7199.
Insulators: TFE fluorocarbon per L-P-403.
Lockwashers: Phosphor bronze per QQ-B-750.
Clamp Sleeve: Nickel silver.
Crimp Ferrule: Annealed copper alloy per WW-T-799.
Gaskets: Silicone rubber per ZZ-R-765, Class IIB, Grade 65-75.

Finish:

Center Contacts: .0001 min. Gold per MIL-G-45204B Type 1, Grade C, Class 2, over .000005 Gold per MIL-G-45204B Type 1, Grade A over .0001 min. copper per MIL-C-14550 Class 4.
Other Metal Parts: Gold plated to meet the finish and corrosion requirements of MIL-C-39012.

MATING CHARACTERISTICS

Engagement Design:

50 Ω Screw-On - - - - - - - - - - - - - - - per MIL-C-39012, Series SMC.
50 Ω Snap-On - - - - - - - - - - - - - - - - per MIL-C-39012, Series SMB.
50 Ω Slide-On - - - - - - - - - - - - - per Sealectro Spec. #52-000-9000
75 Ω Screw-On - - - - - - - - - - - - per Sealectro Spec. #50-100-9000

Engagement Design: (Continued)

75 Ω Snap-On - - - - - - - - - - - - - per Sealectro Spec. #51-100-9000
75 Ω Slide-On - - - - - - - - - - - - - per Sealectro Spec. #52-100-9000
SRM - per MIL-C-39012, Series SMA.
N - per MIL-C-39012, Series N.
BNC - per MIL-C-39012, Series BNC.
TNC - per MIL-C-39012, Series TNC.

Engagement Forces:

Screw-On: 16 inch ounces torque maximum.
Snap-On: Initial, 14 lbs. maximum engagement. After 500 matings, 14 lbs. maximum engagement and disengagement, 2 lbs. minimum disengagement.

Slide-On: Initial, 6 lbs. maximum engagement. After 500 matings, 6 lbs. maximum engagement and disengagement 0.5 lbs. minimum disengagement.

Mating Torque:

Screw-On:
50 ohms - 60 to 70 in/oz. 75 ohms - 80 to 90 in/oz.

Snap-On and Slide-On: N/A

Coupling Proof Torque:

Screw-On: 100 in/oz. minimum
Snap-On and Slide-On: N/A

Coupling Nut Retention:

Screw-On: 35 lbs. minimum
Snap-On and Slide-On: N/A

ENVIRONMENTAL

Temperature Rating:
−65°C to +165° C

Corrosion (salt spray):
MIL-STD-202, Method 101, test condition B, 5% salt solution

Vibration, High Frequency:
MIL-STD-202, Method 204
Screw-On, test condition D (20 G's)
Snap-On, test condition B (15 G's)
Slide-On, test condition A (10 G's)

Shock:
MIL-STD-202, Method 213
Screw-On, test condition C, 100 G's @ 6 milliseconds, 1/2 sine
Snap-On, test condition B, 75 G's @ 6 milliseconds, 1/2 sine
Slide-On, N/A

Temperature Cycling:
MIL-STD-202, Method 102, test condition C, except high temperature shall be +85°C. High temperature shall be +200°C for connectors using 200°C cables.

Moisture Resistance:
MIL-STD-202, Method 106, when interface gasket is used. No measurements at high humidity. Insulation resistance shall be 200 megohms minimum within five minutes after removal from humidity.

GENERAL

Hermetic Seal: Leakage shall not exceed 1×10^{-5} cc/sec. of tracer gas at atmospheric pressure.

Contact Captivation: Unless otherwise specified, all connectors feature captivated contacts. When captivated, the contacts will withstand 4.0 lbs. minimum axial force.

Contact Torque: N/A

Connector Durability: 500 cycles minimum.

Cable Retention:
When properly assembled to the compatible braided coaxial cable, the retention is equal to the breaking strength of the cable. When properly assembled to the compatible semi-rigid cable, the retention is as follows:

.056" dia. 20 lbs. .086" dia 30 lbs. .141" dia. 60 lbs.

Marking: Per MIL-STD-130

*Does not apply to 75 ohm connectors.

BRAIDED CABLE ATTACHMENTS

The Sealectro ConheX connector line provides the widest choice of matings (Screw-On, Snap-On, Slide-On), plus five different types of cable attachments. The selection of cable attachment depends upon the cable being used, and if the attachment is to be made in the field or in the factory. Sealectro factory and field engineers are ready to assist you in the selection of cable/connector attachment best suited to your specific requirements.

Clamp-Type For Braided Cable

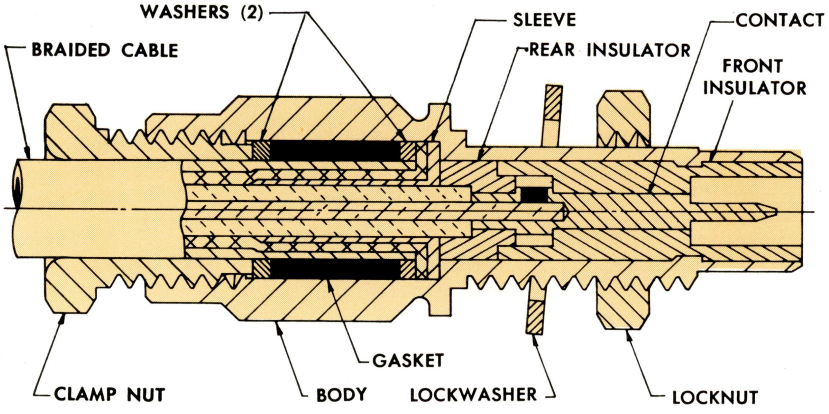

A patented clamp-type design for braided cable employing a unique, easily assembled cable clamping mechanism which grips the cable with a strength equal to the breaking strength of the cable itself. The clamp-type design is readily field repairable without the use of special tools.

Crimp-Type For Braided Cable

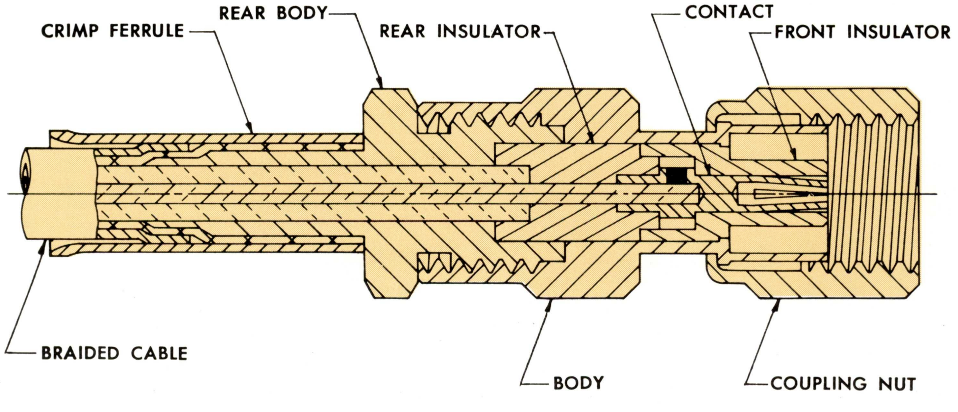

A crimp-type design for braided coaxial cable especially adaptable to high production rates in the manufacture of cable assemblies, and where field repairability is not of the utmost importance. The crimp attachment grips the cable with a strength equal to the breaking strength of the cable itself.

NOTE: It is extremely important that cables be trimmed to the correct dimensions when attaching rf connectors. Assembly Instruction sheets are available for all Sealectro connectors. Crimp-type connectors should be installed with the Sealectro Crimp Tool (Page 55) and with the proper crimp die in order to assure optimum mechanical and electrical results. If a non-standard cable is to be used contact factory for proper trimming and attaching information.

SEMI-RIGID CABLE ATTACHMENTS

ConheX®

Clamp-Type For Semi-Rigid

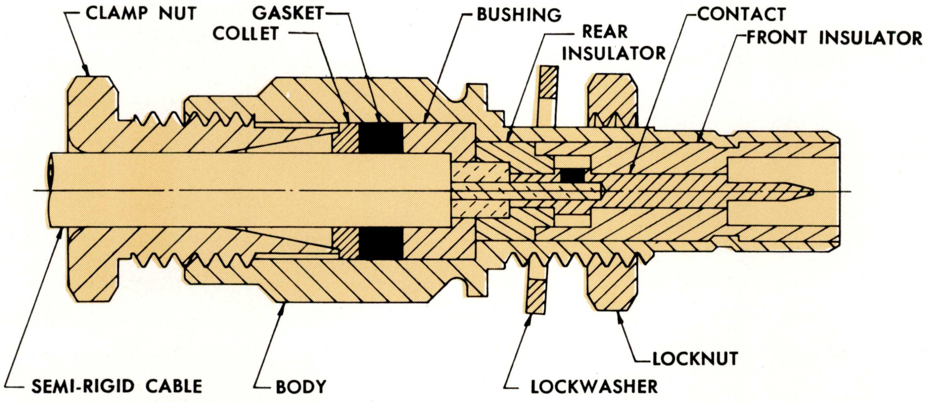

Clamp-Type for semi-rigid cable featuring a slotted collet to secure the cable to the connector. This clamp type is completely field serviceable and does not require soldering of the cable jacket to the connector body.

Solder-Clamp Type For Semi-Rigid

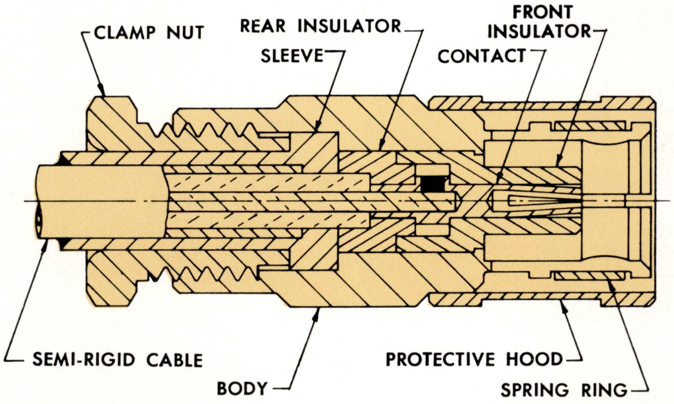

Solder-Clamp type for semi-rigid cable utilizing a sleeve which is soldered to the cable jacket prior to the assembly of the connector to the cable. This unique design permits trimming of the cable dielectric after soldering, thereby eliminating the extrusion problems related to direct solder types.

Direct-Solder Type For Semi-Rigid

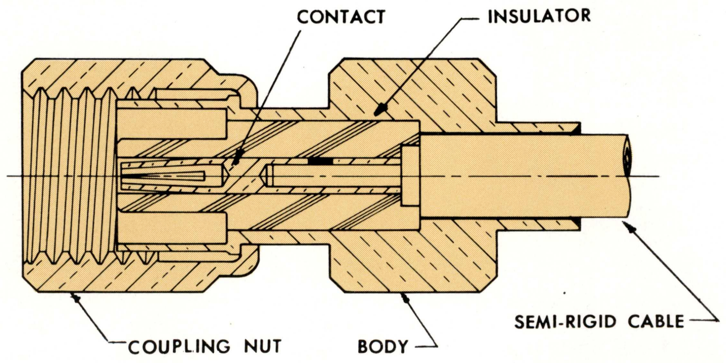

Direct solder type for semi-rigid cable provides simple, fast attachment for high production requirements. Provides excellent termination of popular semi-rigid cables along with the space-saving, economy, and mechanical characteristics of the ConheX design.

CON HEX®

COMPLETE CAPABILITIES AND FACILITIES

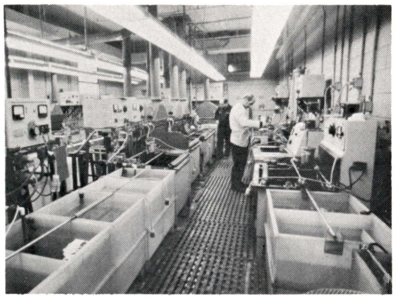

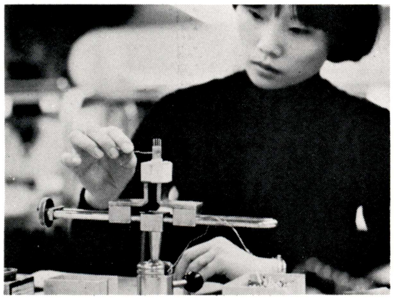

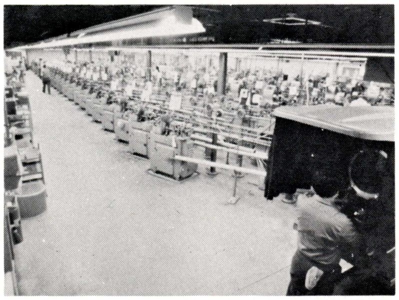

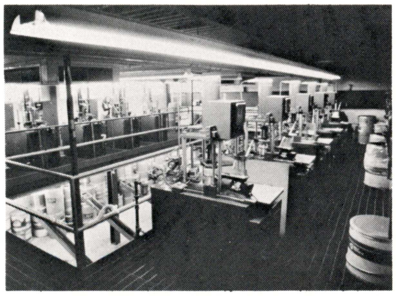

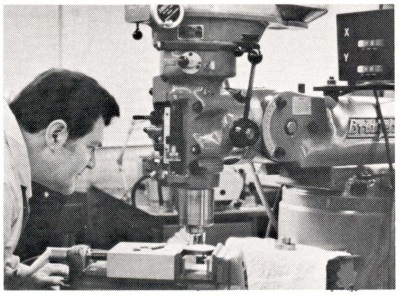

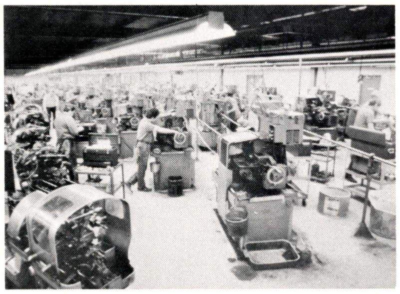

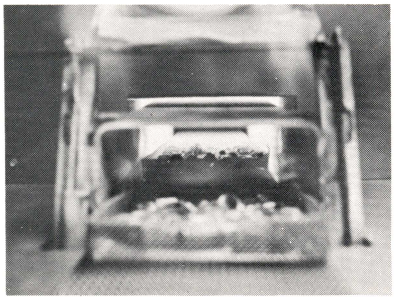

As the leading supplier of subminiature rf connectors, Sealectro has the greatest capabilities and facilities in the industry. Completely self-contained, Sealectro maintains complete control over every facet of design, development, and manufacture of their connectors.

Complete design capabilities combine years of microwave component design with state of the art concepts in producing the design best suited to the customer's requirements. A complete model shop, independent of tool room, or other production related facilities, produces prototypes in the shortest length of time, ready for in house, or customer evaluation.

Sealectro's Microwave Test Laboratory is certified to perform all tests to MIL-C-39012, Military Specification. The laboratory is equipped with the latest electrical and environmental equipment and staffed with microwave engineers and trained technicians.

In the production area, every process step is closely controlled, with practically every operation under the Sealectro roof. A modern Watertown, Conn. facility of over 80,000 square feet houses teflon extrusion, primary metal cutting operations, and automated secondary operations. In Mamaroneck, N. Y., screw machines, chuckers, NC controlled equipment, complete plating and assembly operations are performed. Every step, from primary automatic screw machine operations to the final packaging of the finished part are closely controlled by inspection and test personnel. Sealectro maintains a Quality Assurance program in accordance with MIL-Q-9858 and MIL-I-45208, including qualification, quality conformance, documentation of inspection, material certification, and lot control for traceability.

These capabilities and facilities are your assurance that Sealectro R.F. connectors are uniformly high in quality, dependability and value.

CONHEX CONNECTOR CABLE SELECTION GUIDE

Standard **50 ohm Clamp-type** connectors accept:
RG-161/U, 174/U, 188/U, and 316/U cables.

Standard **50 ohm Crimp-type** connectors accept:
RG-161/U, 174/U, 179/U, 187/U 188/U and 316/U cables.

Standard **75 ohm Clamp-type** connectors accept:
RG-180/U, 195/U, and Surprenant #9872 cables.

Standard **75 ohm Crimp-type** connectors accept:
RG-180/U, 195/U, and Surprenant #9872 cables.

The chart shown below is designed to aid you in the selection of connectors for specific coaxial cables. The connector suffixes shown apply only to the "ConheX" Series of 50 and 75 ohm cable connectors, and to the N, BNC, and TNC units. **The suffixes do not apply to receptacles.**

In using the chart, insert the suffix shown next to the desired cable in the appropriate connector part number, e.g.; 50-007-**0000** for RG-196/U cable would read 50-007-**3196.**

The suffixes underlined are those carried in stock and considered standard variations of the catalog item.

The dimensions shown are for reference purposes only. The data shown is subject to change to coincide with changes in MIL-C-17.

BRAIDED CABLE

CABLE RG#	IMPEDANCE (OHMS)	DIAMETER OF JACKET	DIAMETER OF OUTER CONDUCTOR	DIAMETER OF DIELECTRIC	DIAMETER OF CENTER CONDUCTOR	50 OHM DESCRIPTION		75 OHM DESCRIPTION		HEX DIE SIZE REQ'D (see pg. 62)
						CLAMP	CRIMP	CLAMP	CRIMP	
*RG-55/U	53.5	.206 Max.	.176 Max.	.116 ± .005	.032 Nom.	3141	3142	3141	3142	.213
RG-58/U	50	.195 ±.004	.150 Max.	.116 ± .004	.0375 Max.	3141	3141	3141	3141	.213
RG-59/U	75	.242 ±.004	.191 Max.	.146 ± .004	.023 Nom.	3059	3059	3059	3059	.255
RG-62/U	93	.242 ±.007	.191 Max.	.146 ± .005	.025 Nom.	3059	3059	3059	3059	.255
RG-140/U	75	.233 ±.008	.176 Max.	.146 ± .005	.025 Nom.	3059	3059	3059	3059	.255
RG-141/U	50	.190 ±.005	.146 Max.	.116 ± .005	.039 ± .001	3141	3141	3141	3141	.213
*RG-142/U	50	.195 ±.005	.171 Max.	.116 ± .005	.037 ± .001	3141	3142	3141	3142	.213
RG-161/U	70	.090 Max.	.077 Max.	.057 ± .002	.012 Nom.	0000	0000	3187	3187	.128
RG-174/U	50	.110 ±.005	.088 Max.	.060 ± .003	.019 Nom.	0000	0000	3187	3187	.128
RG-178/U	50	.075 Max.	.054 Max.	.033 ± .002	.012 Nom.	3196	3196	3196	3196	.105
RG-179/U	75	.100 ±.005	.084 Max.	.063 ± .003	.012 Nom.	3187	0000	3187	3187	.128
RG-180/U	95	.145 Max.	.124 Max.	.102 ± .003	.012 Nom.	3195	3195	0000	0000	178
RG-187/U	75	.110 Max.	.084 Max.	.066 Max.	.012 Nom.	3187	0000	3187	3187	.128
RG-188/U	50	.110 Max.	.081 Max.	.060 ± .003	.020 Nom.	0000	0000	3187	3187	.128
RG-195/U	95	.155 Max.	.124 Max.	.102 ± .003	.012 Nom.	3195	3195	0000	0000	.178
RG-196/U	50	.080 Max.	.054 Max.	.034 ± .002	.012 Nom.	3196	3196	3196	3196	.105
*RG-223/U	50	.216 Max.	.176 Max.	.116 ± .004	.035 ± .001	3141	3142	3141	3142	.213
RG-302/U	75	.206 Max.	.176 Max.	.146 ± .005	.025 Nom.	3059	3059	3059	3059	.255
RG-303/U	50	.170±.005	.146 Max.	.116 ± .005	.037 ± .001	3141	3141	3141	3141	.213
RG-316/U	50	.102 Max.	.081 Max.	.060 ± .003	.020 Nom.	0000	0000	3187	3187	.128
Tensolite										
*30850/5T-1	50	.105 Max.	.073 Nom.	.035 Nom.	.012 Nom.	3850	3850	3850	3850	.128
*30875/14T-1	75	.124 Max.	.101 Max.	.060 ± .003	.012 Nom.	3875	3875	3875	3875	.151
*25850/21T-1	50	.124 Max.	.101 Max.	.060 ± .003	.020 Nom.	3875	3875	3875	3875	.151
Micro Dot										
*250-3908	50	.092 Max.	.064 Nom.	.034 Nom.	.012 Nom.	3850	3850	3850	3850	.128
Surprenant										
9872	75	.145 Max.	.114 Nom.	.097 ± .003	.017 Nom.	-3195	-3195	-0000	-0000	.178
*4236	75	.163 Max.	.131 Nom.	.097 ± .003	.017 Nom.	-3236	-3236	-3236	-3236	.178

* These cables are double shielded. The diameter of outer conductor shown is over the second shield.

SEMI-RIGID CABLE

IMPEDANCE	DIAMETER OF OUTER CONDUCTOR	DIELECTRIC DIAMETER	DIAMETER OF CENTER CONDUCTOR	CLAMP-TYPE PART NUMBER SUFFIX	SOLDER/CLAMP PART NUMBER SUFFIX	DIRECT SOLDER PART NUMBER SUFFIX
50	.047 ± .002	.037 ± .001	.011 Nom.	-3705	-9705	
50	.056 ± .002	.034 ± .002	.012 Nom.	-3701	-9701	
50	.070 ± .001	.059 ± .001	.018 Nom.	-3704	-9704	
50	.085 ± .001	.066 ± .001	.020 Nom.	-3702	-9702	—9072
70	.085 ± .001	.060 ± .001	.011 Nom.	-3702	-9702	—9072
50	.0865 ± .001	.0658 ± .001	.020 Nom.	-3702	-9702	—9072
50†	.141 ± .001	.119 ± .001	.036 Nom.	-3703	-9703	—9073
75	.141 ± .001	.118 ± .001	.020 Nom.	-3714	-9714	

†RG-402/U

50 OHM CABLE PLUGS
CLAMP-TYPE
FOR BRAIDED COAX

STRAIGHT

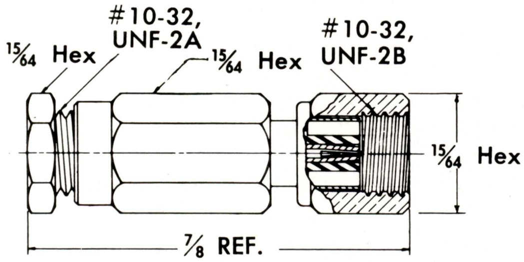

SCREW-ON

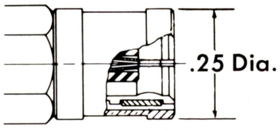

SNAP-ON

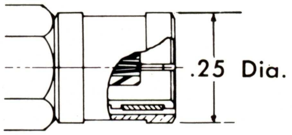

SLIDE-ON

CABLE	SCREW-ON	SNAP-ON	SLIDE-ON
RG-188/U; 316/U	50-007-0000	51-007-0000	52-007-0000
RG-178/U; 196/U	50-007-3196	51-007-3196	52-007-3196

STRAIGHT BULKHEAD*

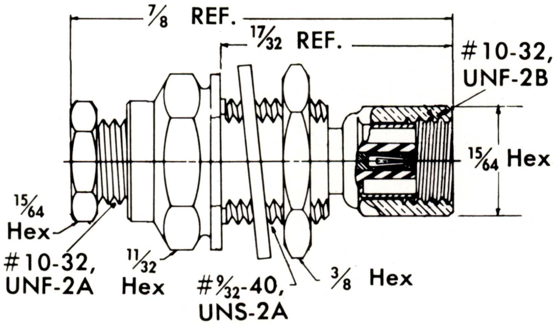

SCREW-ON

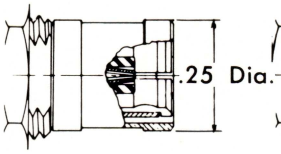

SNAP-ON

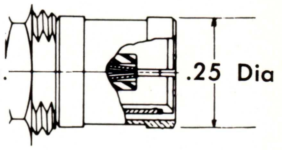

SLIDE-ON

CABLE	SCREW-ON	SNAP-ON	SLIDE-ON
RG-188/U; 316/U	50-009-0000	51-009-0000	52-009-0000
RG-178/U; 196/U	50-009-3196	51-009-3196	52-009-3196

*Designed for .093" max. panel

RIGHT ANGLE

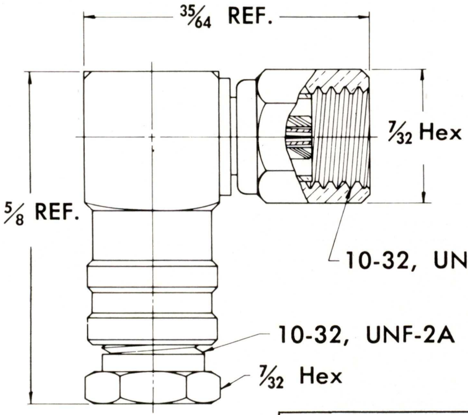

SCREW-ON

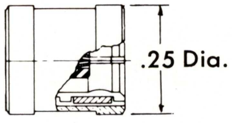

SNAP-ON

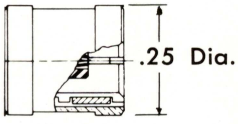

SLIDE-ON

CABLE	SCREW-ON	SNAP-ON	SLIDE-ON
RG-188/U; 316/U	50-311-3188	51-311-3188	52-311-3188
RG-178/U; 196/U	50-311-3196	51-311-3196	52-311-3196

SEE PAGE 11 FOR COMPLETE CABLE LISTING
SEE PAGE 53 FOR MOUNTING INFORMATION

50 OHM CABLE JACKS
CLAMP-TYPE
FOR BRAIDED COAX

Snap-on jacks can be used in place of **Slide-on** jacks, as they will mate with **Slide-on** plugs.

STRAIGHT

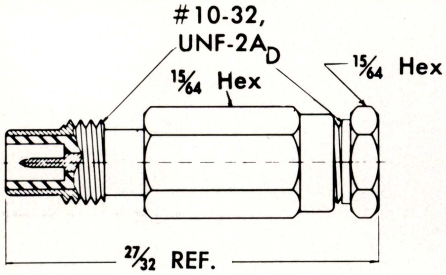

SCREW-ON

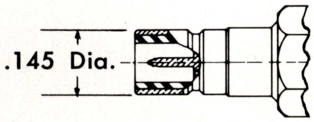

SNAP-ON

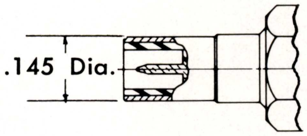

SLIDE-ON

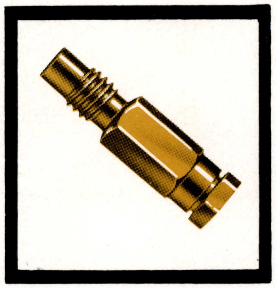

CABLE	SCREW-ON	SNAP-ON	SLIDE-ON
RG-188/U; 316/U	50-008-0000	51-008-0000	52-008-0000
RG-178/U; 196/U	50-008-3196	51-008-3196	52-008-3196

STRAIGHT BULKHEAD*

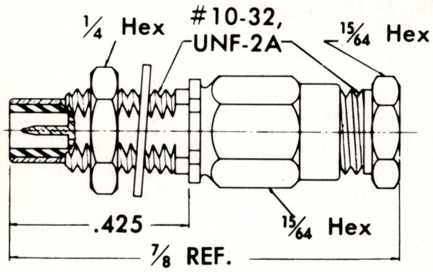

SCREW-ON

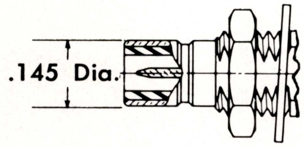

SNAP-ON

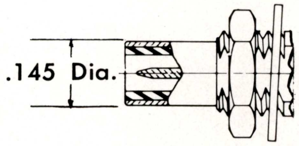

SLIDE-ON

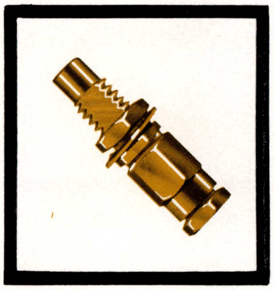

CABLE	SCREW-ON	SNAP-ON	SLIDE-ON
RG-188/U; 316/U	50-010-0000	51-010-0000	52-010-0000
RG-178/U; 196/U	50-010-3196	51-010-3196	52-010-3196

RIGHT ANGLE BULKHEAD*

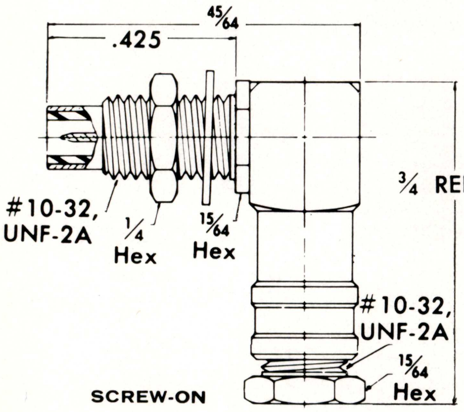

SCREW-ON

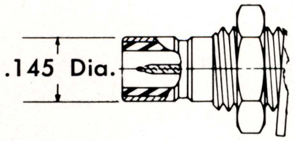

SNAP-ON

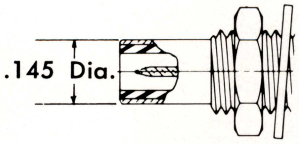

SLIDE-ON

CABLE	SCREW-ON	SNAP-ON	SLIDE-ON
RG-188/U; 316/U	50-012-0000	51-012-0000	52-012-0000
RG-178/U; 196/U	50-012-3196	51-012-3196	52-012-3196

*Designed for .093" max. panel

SEE PAGE 11 FOR COMPLETE CABLE LISTING
SEE PAGE 53 FOR MOUNTING INFORMATION

50 OHM CABLE PLUGS
SEMI-RIGID CABLE

For explanations of Clamp-Type and Solder-Clamp-Type see page 4.

For Snap-on and Slide-on versions of the items shown, change the second digit of the part number to a (1) or (2). i.e.: 51-007-3701 for Snap-on, 52-007-3701 for Slide-on.

STRAIGHT

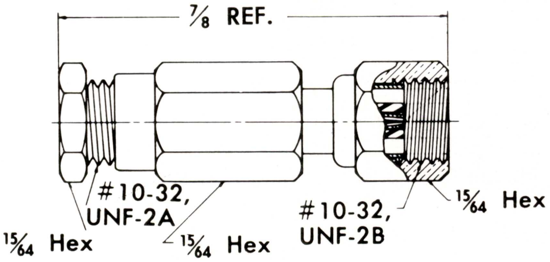

FIGURE A

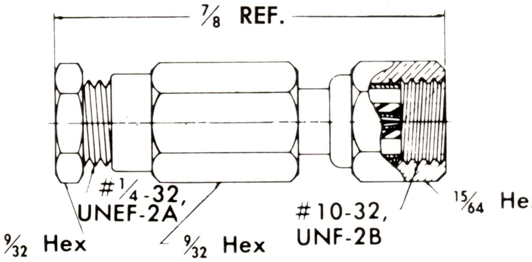

FIGURE B

	DIAMETER OVER CABLE JACKET		
	.056 (FIGURE A)	.086 (FIGURE A)	.141 (FIGURE B)
CLAMP TYPE	50-007-3701	50-007-3702	50-007-3703
SOLDER—CLAMP TYPE	50-007-9701	50-007-9702	50-007-9703

STRAIGHT BULKHEAD*

*Designed for .093" max. panel

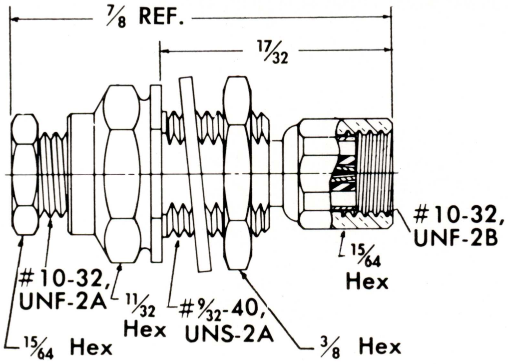

FIGURE A

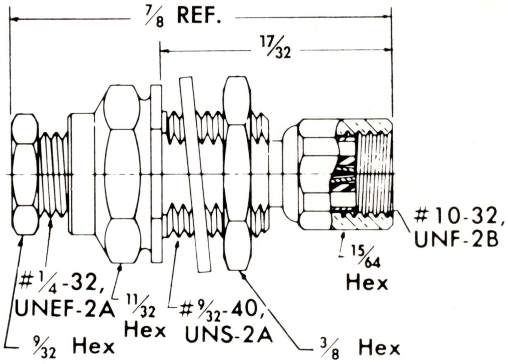

FIGURE B

	DIAMETER OVER CABLE JACKET		
	.056 (FIGURE A)	.086 (FIGURE A)	.141 (FIGURE B)
CLAMP TYPE	50-009-3701	50-009-3702	50-009-3703
SOLDER—CLAMP TYPE	50-009-9701	50-009-9702	50-009-9703

RIGHT ANGLE

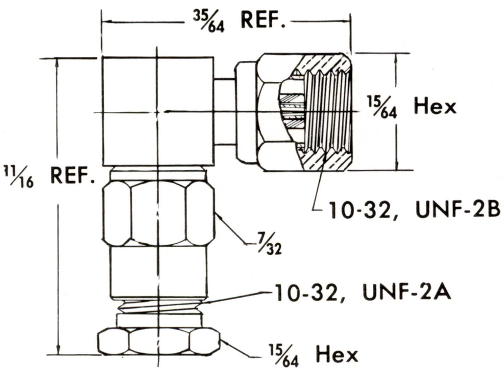

FIGURE A

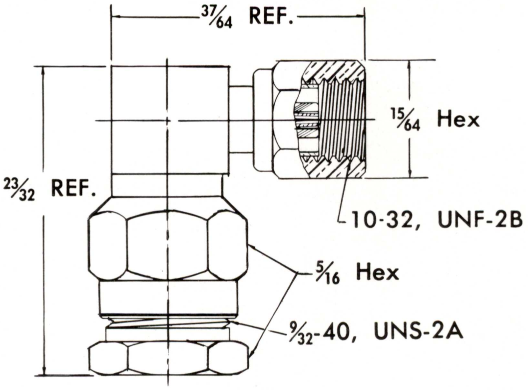

FIGURE B

	DIAMETER OVER CABLE JACKET		
	.056 (FIGURE A)	.086 (FIGURE A)	.141 (FIGURE B)
CLAMP TYPE	50-011-3701	50-011-3702	50-011-3703
SOLDER—CLAMP TYPE	50-011-9701	50-011-9702	50-011-9703

SEE PAGE 11 FOR COMPLETE CABLE LISTING
SEE PAGE 53 FOR MOUNTING INFORMATION

50 OHM CABLE JACKS
SEMI-RIGID CABLE

Contact factory for part-numbers of connectors for use with cables other than those shown.

Snap-on jacks can be used in place of **Slide-on** jacks, as they will mate with **Slide-on** plugs.

STRAIGHT

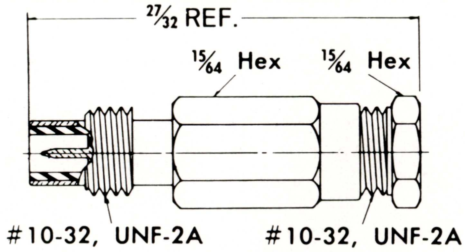

FIGURE A

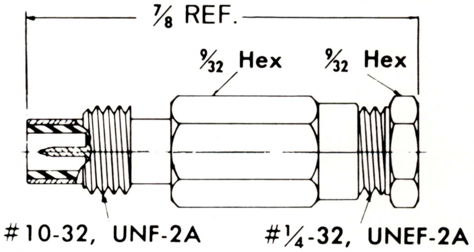

FIGURE B

	DIAMETER OVER CABLE JACKET		
	.056 (FIGURE A)	.086 (FIGURE A)	.141 (FIGURE B)
CLAMP TYPE	50-008-3701	50-008-3702	50-008-3703
SOLDER—CLAMP TYPE	50-008-9701	50-008-9702	50-008-9703

STRAIGHT BULKHEAD*

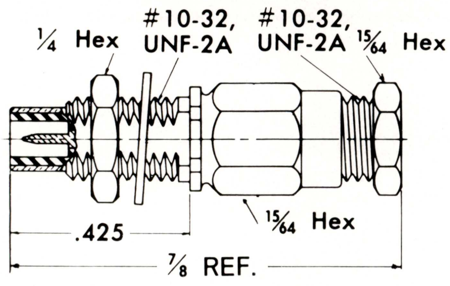

FIGURE A

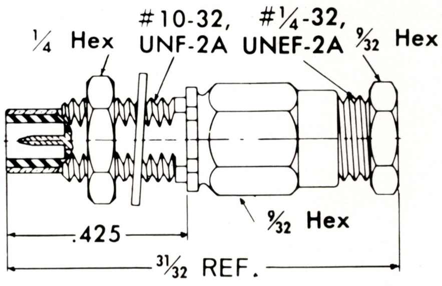

FIGURE B

	DIAMETER OVER CABLE JACKET		
	.056 (FIGURE A)	.086 (FIGURE A)	.141 (FIGURE B)
CLAMP TYPE	50-010-3701	50-010-3702	50-010-3703
SOLDER—CLAMP TYPE	50-010-9701	50-010-9702	50-010-9703

RIGHT ANGLE BULKHEAD*

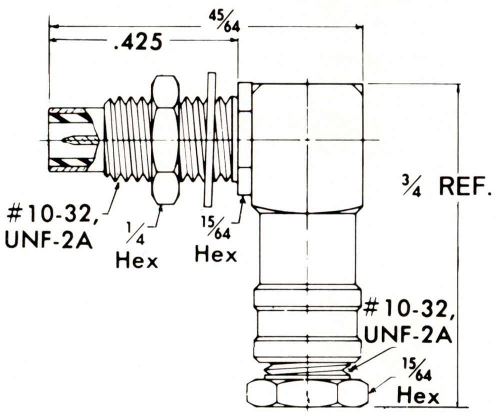

FIGURE A

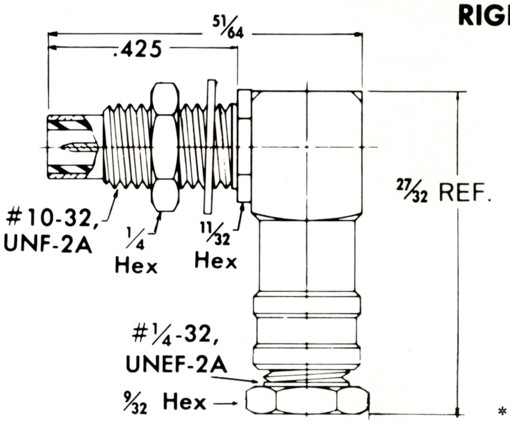

FIGURE B

*Designed for .093" max. panel

	DIAMETER OVER CABLE JACKET		
	.056 (FIGURE A)	.086 (FIGURE A)	.141 (FIGURE B)
CLAMP TYPE	50-012-3701	50-012-3702	50-012-3703
SOLDER—CLAMP TYPE	50-012-9701	50-012-9702	50-012-9703

SEE PAGE 11 FOR COMPLETE CABLE LISTING
SEE PAGE 53 FOR MOUNTING INFORMATION

50-OHM
DIRECT SOLDER FOR SEMI-RIGID CABLES

These connectors provide the space-saving of SMC connectors along with the reliability of telescoping interface and economies of this series for use on .085" semi-rigid cable. They are recommended for use up to 8 GHz.

STRAIGHT

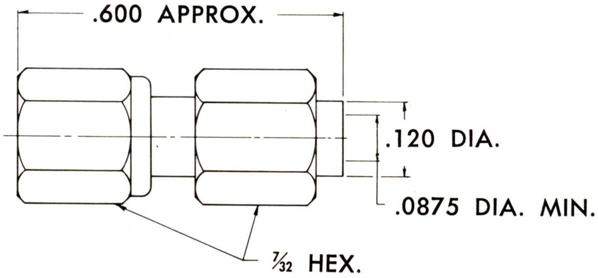

SCREW-ON	50-307-9072

STRAIGHT

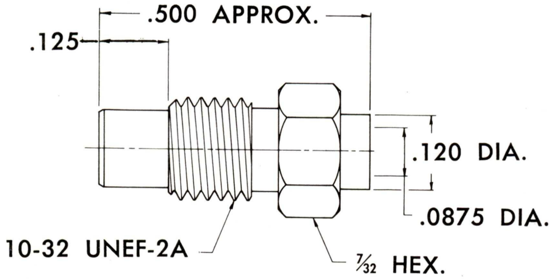

SCREW-ON	50-308-9072

RIGHT ANGLE

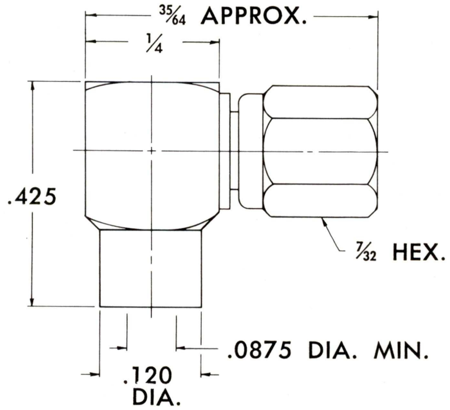

SCREW-ON	50-311-9072

SEE PAGE 11 FOR COMPLETE CABLE LISTING
SEE PAGE 53 FOR MOUNTING INFORMATION

These unique SMB cable plugs provide positive mate locking for heavy cable loading or installations subject to unmating forces. These units mate with standard SMB jack unit and are interchangeable with most SMB cable plugs by merely unscrewing the usual Snap-On front end and screwing on the Positive-Lock mating unit. Mating is accomplished by pushing on knurled ring and pulling on knurled section to unmate. Cannot be unmated by pulling on cable.

50-OHM POSITIVE-LOCK CABLE PLUGS

STRAIGHT

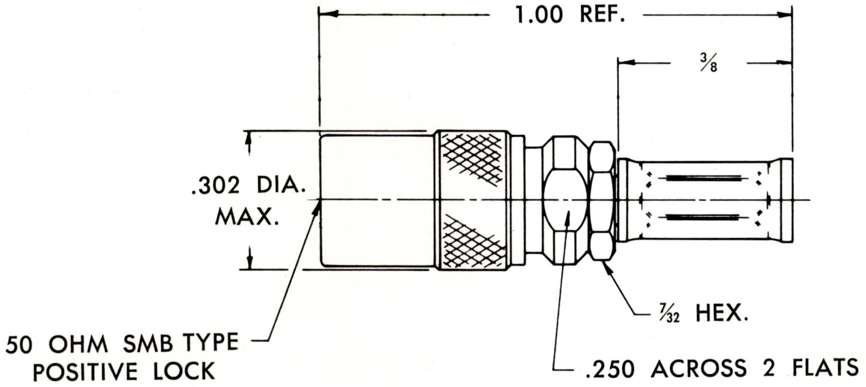

CABLE	POSI-LOCK, SNAP-ON
RG-188/U; RG-316/U	51-324-1188
RG-178/U; RG-196/U	51-324-1196

RIGHT ANGLE

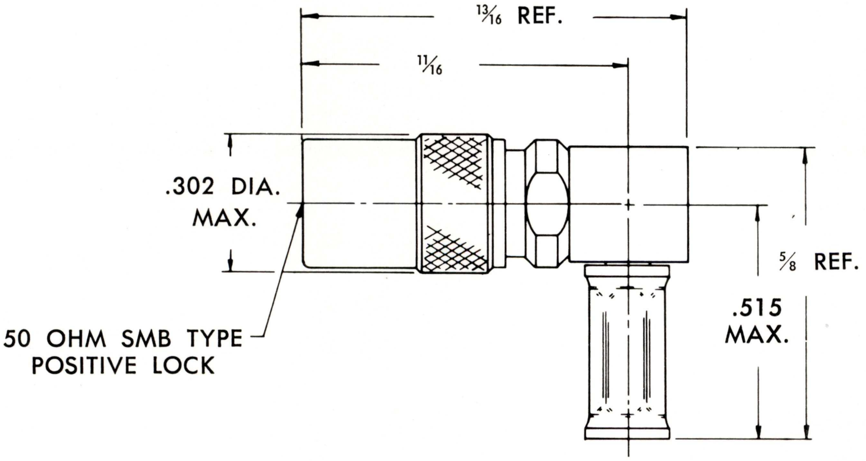

CABLE	POSI-LOCK, SNAP-ON
RG-188/U; RG-316/U	51-328-1188
RG-178/U; RG-196/U	51-328-1196

SEE PAGE 11 FOR COMPLETE CABLE LISTING
SEE PAGE 53 FOR MOUNTING INFORMATION

50 OHM CABLE PLUGS
CRIMP-TYPE
FOR BRAIDED COAX

STRAIGHT

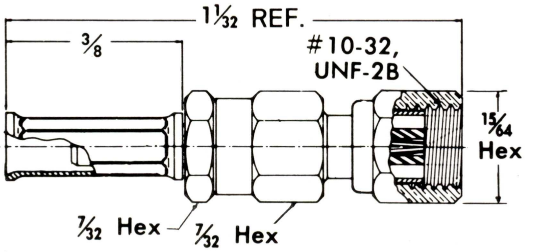

SCREW-ON

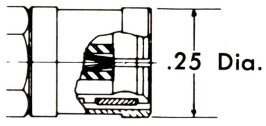

SNAP-ON

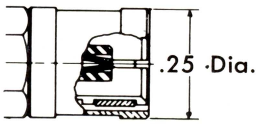

SLIDE-ON

CABLE	SCREW-ON	SNAP-ON	SLIDE-ON
RG-188/U; 316/U	50-024-0000	51-024-0000	52-024-0000
RG-178/U; 196/U	50-024-3196	51-024-3196	52-024-3196

STRAIGHT BULKHEAD*

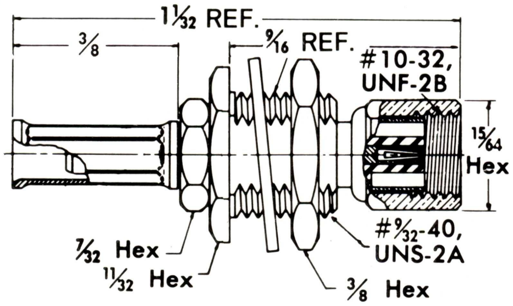

SCREW-ON

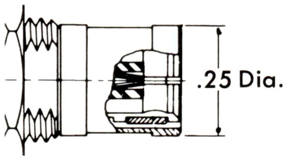

SNAP-ON

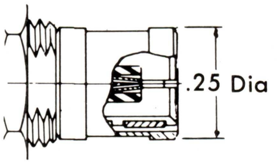

SLIDE-ON

*Designed for .093" max. panel

CABLE	SCREW-ON	SNAP-ON	SLIDE-ON
RG-188/U; 316/U	50-026-0000	51-026-0000	52-026-0000
RG-178/U; 196/U	50-026-3196	51-026-3196	52-026-3196

RIGHT ANGLE

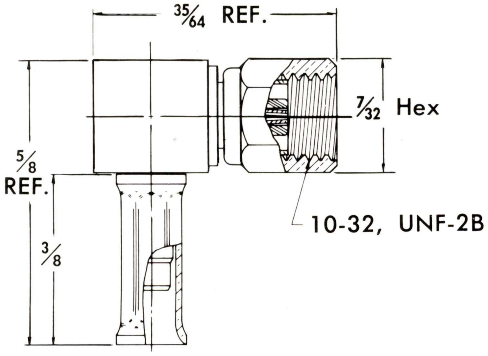

SCREW-ON

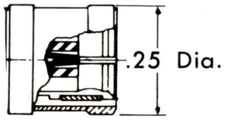

SNAP-ON

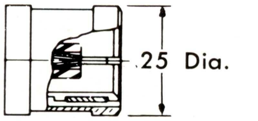

SLIDE-ON

CABLE	SCREW-ON	SNAP-ON	SLIDE-ON
RG-188/U; 316/U	50-328-3188	51-328-3188	52-328-3188
RG-178/U; 196/U	50-328-3196	51-328-3196	52-328-3196

SEE PAGE 11 FOR COMPLETE CABLE LISTING
SEE PAGE 53 FOR MOUNTING INFORMATION

50 OHM CABLE JACKS
CRIMP-TYPE
FOR BRAIDED COAX

Snap-on jacks can be used in place of **Slide-on** jacks, as they will mate with **Slide-on** plugs.

STRAIGHT

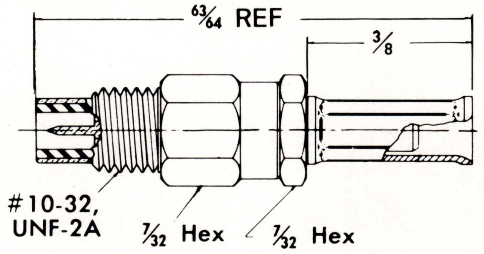

SCREW-ON

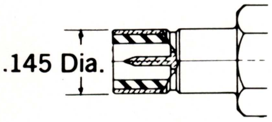

SNAP-ON

SLIDE-ON

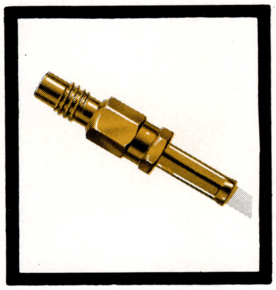

CABLE	SCREW-ON	SNAP-ON	SLIDE-ON
RG-188/U; 316/U	50-025-0000	51-025-0000	52-025-0000
RG-178/U; 196/U	50-025-3196	51-025-3196	52-025-3196

STRAIGHT BULKHEAD*

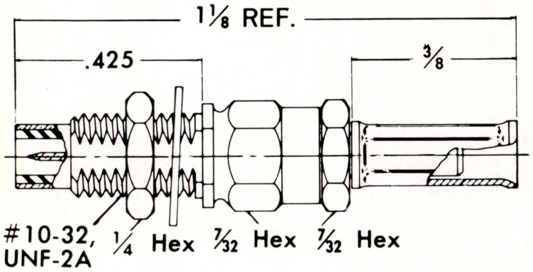

SCREW-ON

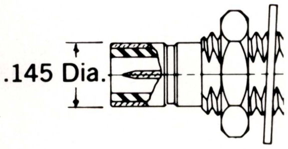

SNAP-ON

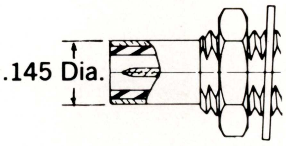

SLIDE-ON

CABLE	SCREW-ON	SNAP-ON	SLIDE-ON
RG-188/U; 316/U	50-027-0000	51-027-0000	52-027-0000
RG-178/U; 196/U	50-027-3196	51-027-3196	52-027-3196

RIGHT ANGLE BULKHEAD*

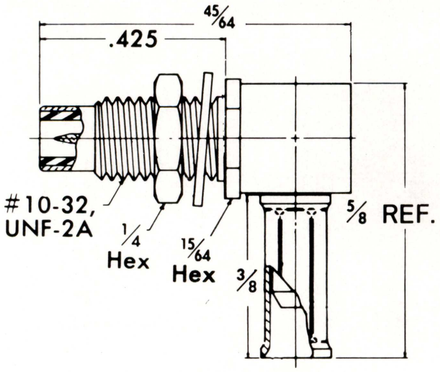

SCREW-ON

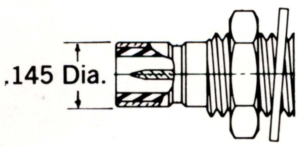

SNAP-ON

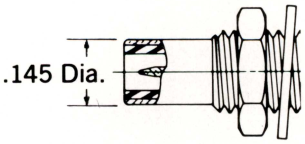

SLIDE-ON

CABLE	SCREW-ON	SNAP-ON	SLIDE-ON
RG-188/U; 316/U	50-030-0000	51-030-0000	52-030-0000
RG-178/U; 196/U	50-030-3196	51-030-3196	52-030-3196

*Designed for .093" max. panel

SEE PAGE 11 FOR COMPLETE CABLE LISTING
SEE PAGE 53 FOR MOUNTING INFORMATION

50 OHM BULKHEAD*
PLUG RECEPTACLES

REAR MOUNT

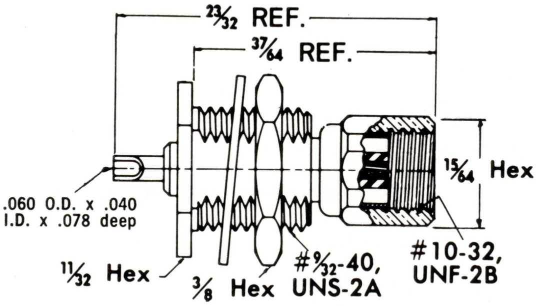

SCREW-ON
50-044-0000

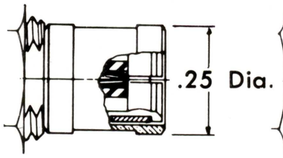

SNAP-ON
51-044-0000

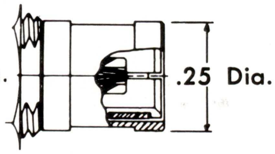

SLIDE-ON
52-044-0000

FRONT MOUNT

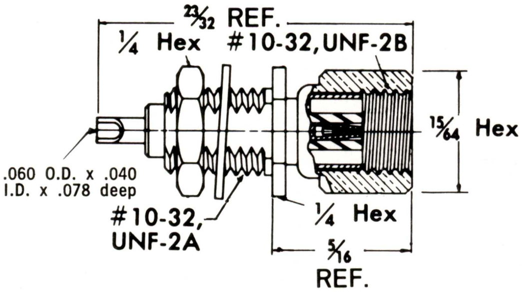

SCREW-ON
50-046-0000

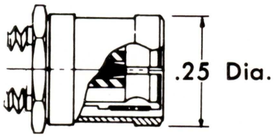

SNAP-ON
51-046-0000

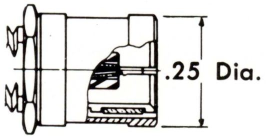

SLIDE-ON
52-046-0000

RIGHT ANGLE

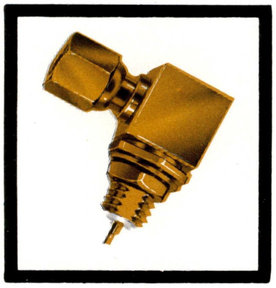

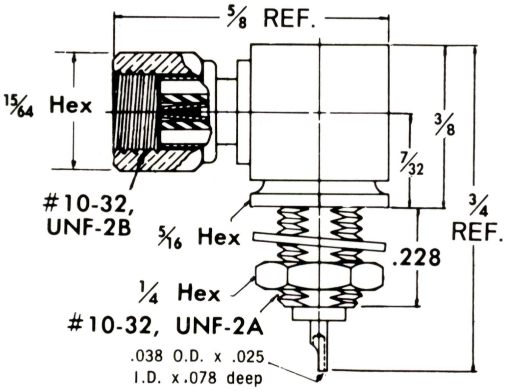

SCREW-ON
50-048-0000

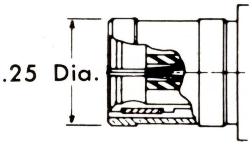

SNAP-ON
51-048-0000

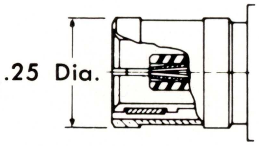

SLIDE-ON
52-048-0000

*Designed for .093" max. panel

SEE PAGE 53 FOR MOUNTING INFORMATION

50 OHM BULKHEAD* JACK RECEPTACLES

REAR MOUNT

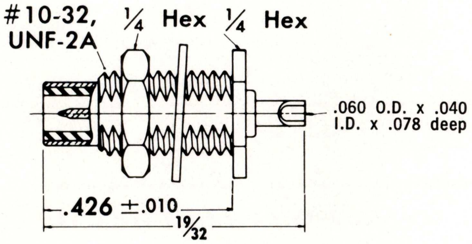

SCREW-ON
50-043-0000

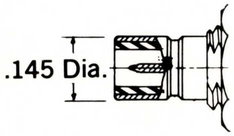

SNAP-ON
51-043-0000

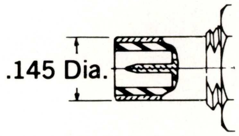

SLIDE-ON
52-043-0000

FRONT MOUNT

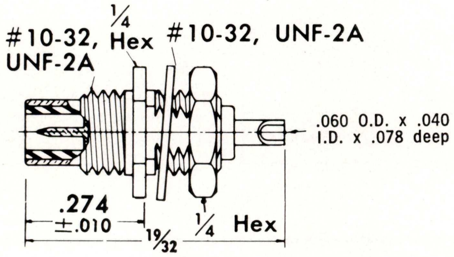

SCREW-ON
50-045-0000

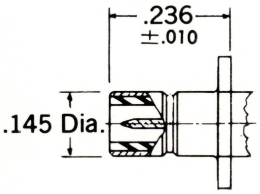

SNAP-ON
51-045-0000

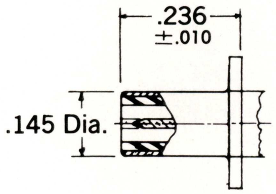

SLIDE-ON
52-045-0000

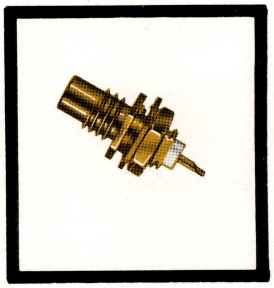

RIGHT ANGLE

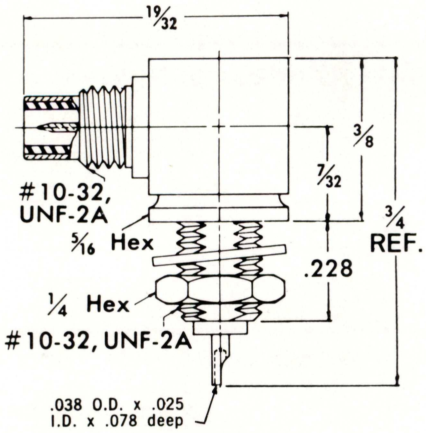

SCREW-ON
50-047-0000

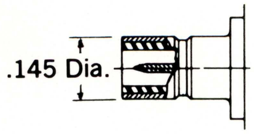

SNAP-ON
51-047-0000

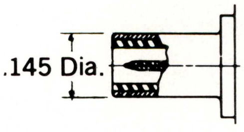

SLIDE-ON
52-047-0000

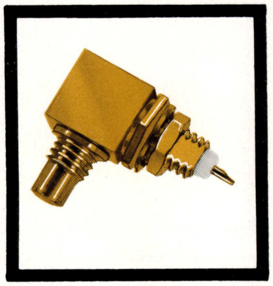

*Designed for .093" max. panel

SEE PAGE 53 FOR MOUNTING INFORMATION

50 OHM FLANGE MOUNT RECEPTACLES

The ConheX flange mount receptacles shown below are precision connectors designed for use in Microwave Integrated Circuits.

Because of their use in expensive hybrid and monolithic microstrip or suspended-substrate circuits, each connector shown on this and the facing page, is constructed of passivated stainless steel for ruggedness and long life.

The units on this page allow the use of ConheX connectors on MIC frames designed for use with SMA (Sealectro SRM) types of connectors. For more information on "SRM" (3mm) connectors, ask for complete catalog.

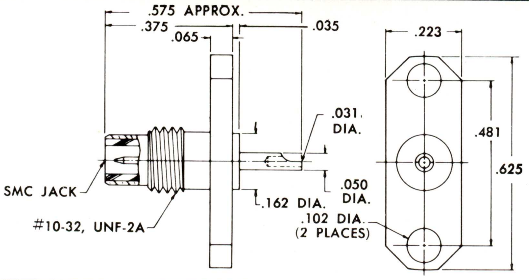

NARROW FLANGE JACK SOLDER POT

	MATING ENGAGEMENT	
	SCREW-ON	SNAP-ON
CAPTIVATED CONTACT	50-045-9310-89	51-045-9310-89

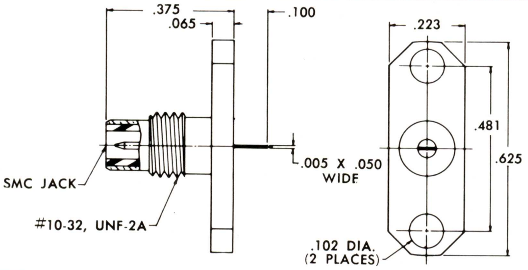

NARROW FLANGE JACK TAB CONTACT

	MATING ENGAGEMENT	
	SCREW-ON	SNAP-ON
CAPTIVATED CONTACT	50-045-9320-89	51-045-9320-89
REMOVABLE CONTACT		51-045-9321-89

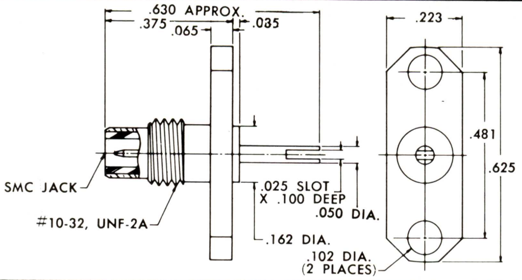

NARROW FLANGE JACK SLOTTED CONTACT

	MATING ENGAGEMENT	
	SCREW-ON	SNAP-ON
CAPTIVATED CONTACT	50-045-9330-89	51-045-9330-89

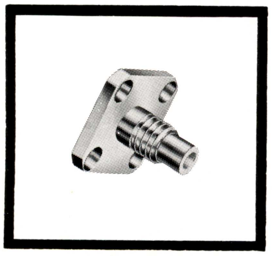

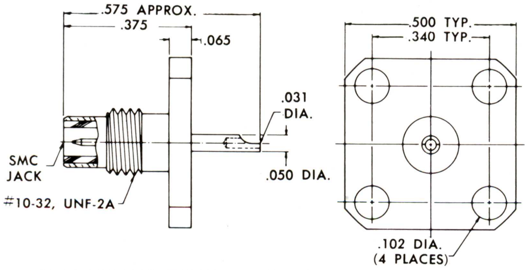

SQUARE FLANGE JACK SOLDER POT

	MATING ENGAGEMENT	
	SCREW-ON	SNAP-ON
CAPTIVATED CONTACT	50-045-9340-89	51-045-9340-89

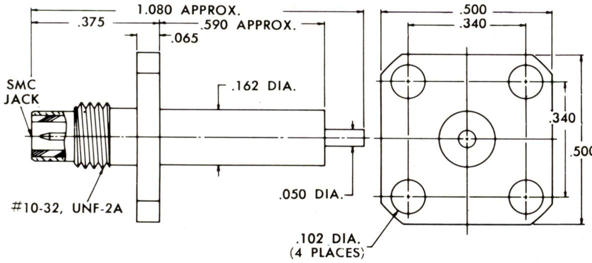

SQUARE FLANGE JACK TERMINAL CONTACT

	MATING ENGAGEMENT	
	SCREW-ON	SNAP-ON
CAPTIVATED CONTACT	50-045-9350-89	51-045-9350-89

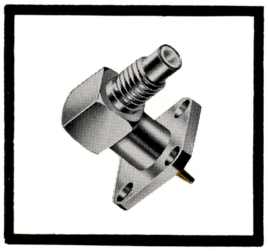

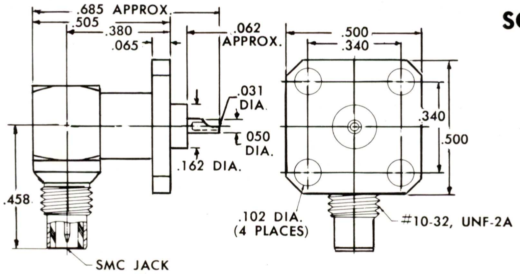

SQUARE FLANGE JACK RIGHT ANGLE, SOLDER POT

	MATING ENGAGEMENT	
	SCREW-ON	SNAP-ON
CAPTIVATED CONTACT	50-047-9340-89	51-047-9340-89

The size of present MIC assemblies, which proved to be so important in airborne and space applications, was made possible by the development of substrates with high dielectric co-efficients. With the precision connectors shown below, these circuits can now be made even smaller.

The small mounting flange, only .375" square, allows the user to reduce the volume of a MIC frame up to 25%, with a resulting decrease in weight.

The units shown on this and the facing page can be ordered with a gold plated finish as well. Simply replace the "-89" suffix with "-31" to indicate gold plated stainless steel.

50 OHM FLANGE MOUNT RECEPTACLES

NARROW FLANGE JACK SOLDER POT

	MATING ENGAGEMENT	
	SCREW-ON	SNAP-ON
CAPTIVATED CONTACT	50-045-4524-89	51-045-4524-89

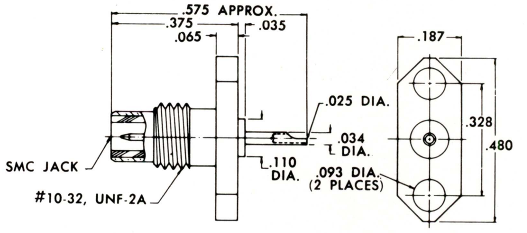

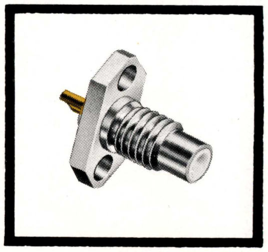

NARROW FLANGE JACK TAB CONTACT

	MATING ENGAGEMENT	
	SCREW-ON	SNAP-ON
CAPTIVATED CONTACT	50-045-4528-89	51-045-4528-89
REMOVABLE CONTACT	50-045-4518-89	51-045-4518-89

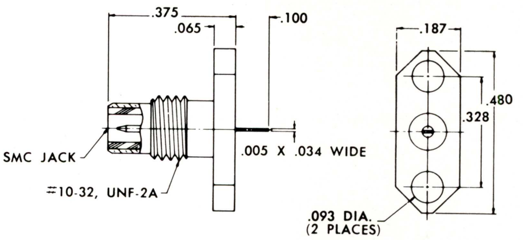

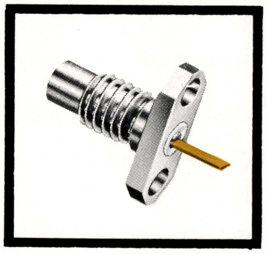

NARROW FLANGE JACK SLOTTED CONTACT

	MATING ENGAGEMENT	
	SCREW-ON	SNAP-ON
CAPTIVATED CONTACT	50-045-4510-89	
REMOVABLE CONTACT	50-045-4508-89	51-045-4508-89

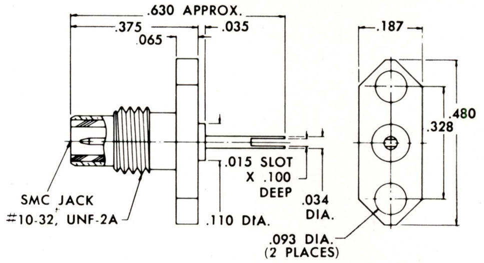

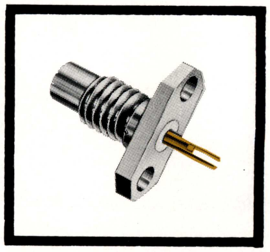

SQUARE FLANGE JACK SOLDER POT

	MATING ENGAGEMENT	
	SCREW-ON	SNAP-ON
CAPTIVATED CONTACT	50-045-4504-89	51-045-4504-89

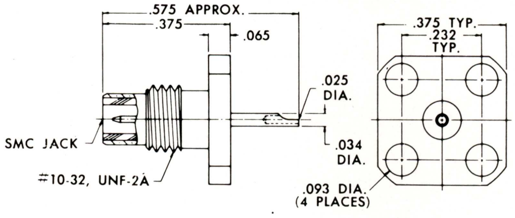

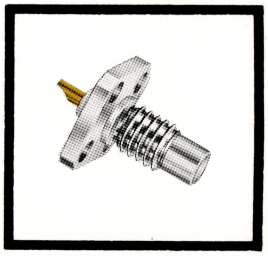

SQUARE FLANGE JACK TERMINAL CONTACT

	MATING ENGAGEMENT	
	SCREW-ON	SNAP-ON
CAPTIVATED CONTACT	50-045-4520-89	51-045-4520-89

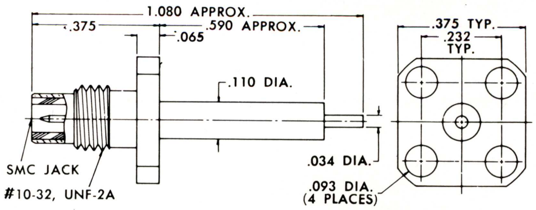

SQUARE FLANGE JACK RIGHT ANGLE, SOLDER POT

	MATING ENGAGEMENT
	SCREW-ON
CAPTIVATED CONTACT	50-047-4504-89

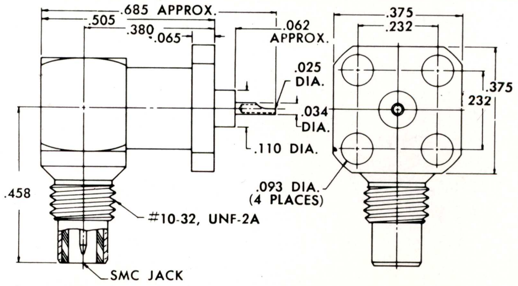

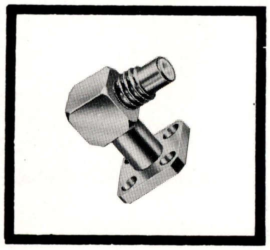

50 OHM PRINTED CIRCUIT PLUG & JACK RECEPTACLES

These receptacles are particularly useful where it is desired to have a breakable cable-to-circuit connection in which the ground is carried to the circuit and the center conductor or signal circuit is carried to some further internal circuitry.

Snap-on jacks can be used in place of **Slide-on** jacks, as they will mate with **Slide-on** plugs.

STRAIGHT JACK RECEPTACLE

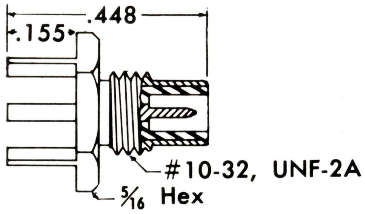

SCREW-ON
50-051-0000

SNAP-ON
51-051-0000

SLIDE-ON
52-051-0000

RIGHT ANGLE JACK RECEPTACLE

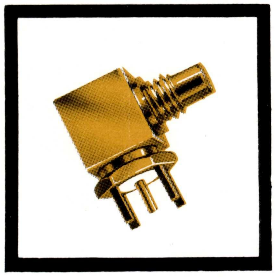

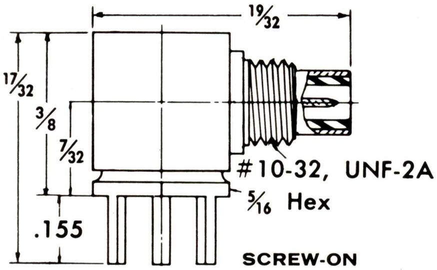

SCREW-ON
50-053-0000

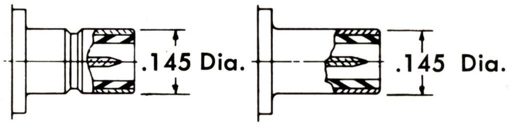

SNAP-ON
51-053-0000

SLIDE-ON
52-053-0000

STRAIGHT PLUG RECEPTACLE

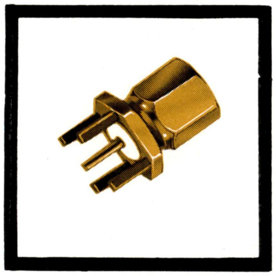

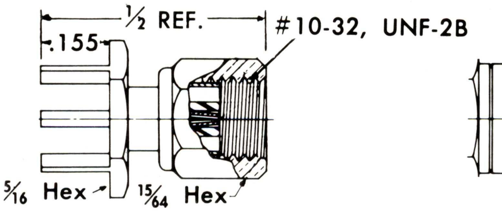

SCREW-ON
50-052-0000

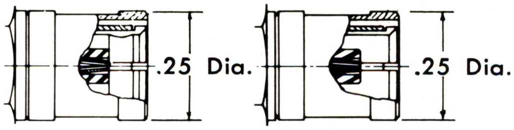

SNAP-ON
51-052-0000

SLIDE-ON
52-052-0000

RIGHT ANGLE PLUG RECEPTACLE

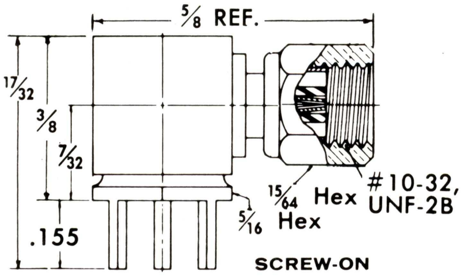

SCREW-ON
50-054-0000

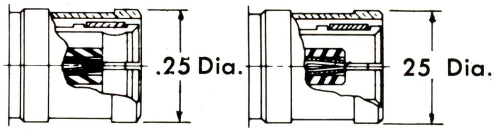

SNAP-ON
51-054-0000

SLIDE-ON
52-054-0000

SEE PAGE 53 FOR MOUNTING INFORMATION

50 OHM RECESSED BULKHEAD* CABLE JACKS AND RECEPTACLES

Snap-on jacks can be used in place of **Slide-on** jacks, as they will mate with **Slide-on** plugs.

RECESSED CLAMP TYPE CABLE JACK

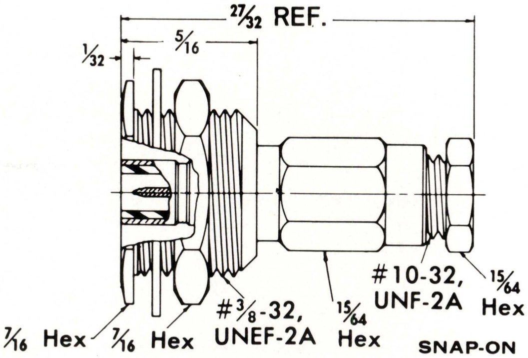

SNAP-ON

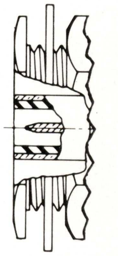

SLIDE-ON

CABLE	SNAP-ON	SLIDE-ON
RG-188/U; 316/U	51-015-0000	52-015-0000

RECESSED CRIMP TYPE CABLE JACK

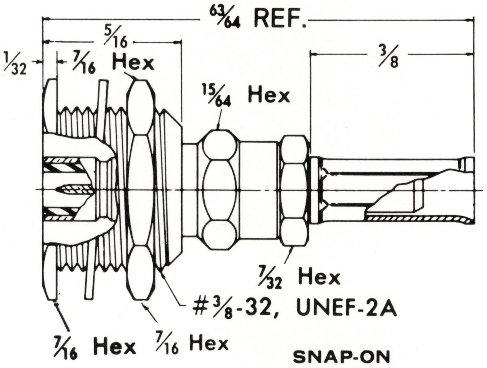

SNAP-ON

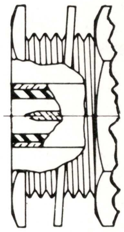

SLIDE-ON

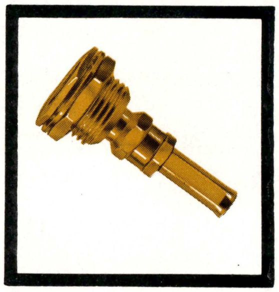

CABLE	SNAP-ON	SLIDE-ON
RG-188/U; 316/U	51-033-0000	52-033-0000

RECESSED JACK RECEPTACLE

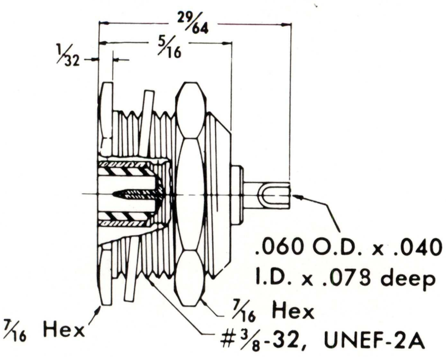

SNAP-ON
51-049-0000

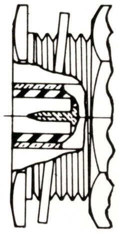

SLIDE-ON
52-049-0000

*Designed for .093" max. panel

SEE PAGE 11 FOR COMPLETE CABLE LISTING
SEE PAGE 53 FOR MOUNTING INFORMATION

50 OHM STRIPLINE CONNECTORS SURFACE MOUNTING

"ConheX" Subminiature Stripline Connectors are designed for use with single and multiple layer stripline modules. Careful attention has been given to design so as to provide complete impedance matching within the confines of the connector. Properly mounted on a stripline package, these connectors will allow you to realize the full advantages of stripline circuitry.

Contact factory for part numbers of units used on Ground Plane Spacings other than those listed.

RIGHT ANGLE JACK

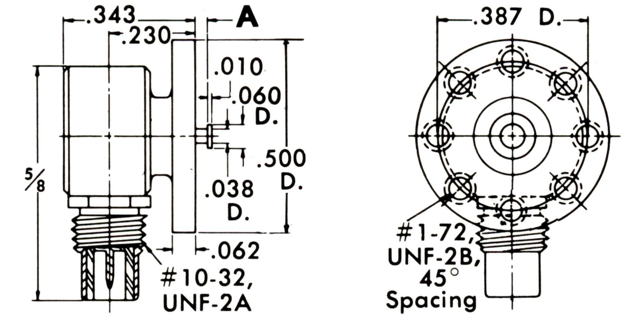

SCREW-ON

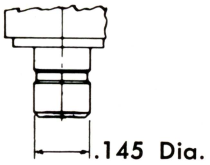

SNAP-ON

GROUND PLANE SPACING	A DIM.	CONTACT STYLE	PART NUMBER	
			SCREW-ON	SNAP-ON
1/16	.031	Captivated Without Turret	50-058-2210	51-058-2210
		Removable With Turret	50-058-2211	51-058-2211
1/8	.063	Captivated Without Turret	50-058-2212	51-058-2212
		Removable With Turret	50-058-2213	51-058-2213
1/4	.125	Captivated Without Turret	50-058-2214	51-058-2214
		Removable With Turret	50-058-2215	51-058-2215

STRAIGHT JACK

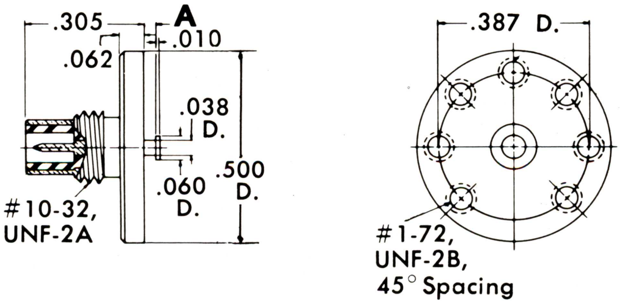

SCREW-ON

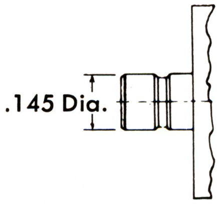

SNAP-ON

GROUND PLANE SPACING	A DIM.	CONTACT STYLE	PART NUMBER	
			SCREW-ON	SNAP-ON
1/16	.031	Captivated Without Turret	50-056-2210	51-056-2210
		Removable With Turret	50-056-2211	51-056-2211
1/8	.063	Captivated Without Turret	50-056-2212	51-056-2212
		Removable With Turret	50-056-2213	51-056-2213
1/4	.125	Captivated Without Turret	50-056-2214	51-056-2214
		Removable With Turret	50-056-2215	51-056-2215

50 OHM STRIPLINE CONNECTORS SURFACE MOUNTING

"ConheX" Subminiature Stripline Connectors are designed for use with single and multiple layer stripline modules. Careful attention has been given to design so as to provide complete impedance matching within the shell or body of the connector. Properly mounted on a stripline package, these connectors will allow you to realize the full advantages of stripline circuitry. **Snap-on** jacks can be used in place of **Slide-on** jacks, as they will mate with **Slide-on** plugs.

STRAIGHT END MOUNT JACK

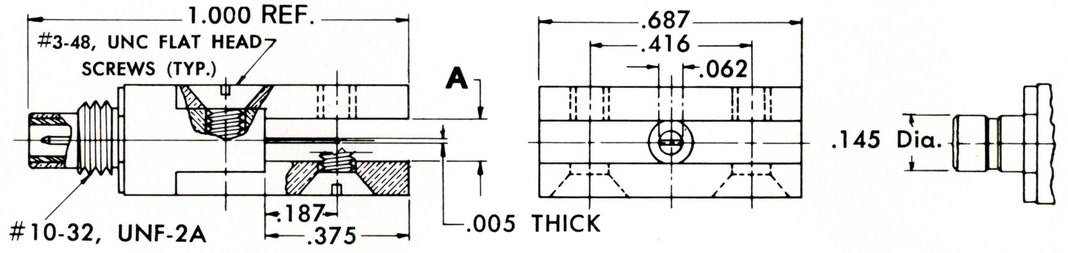

SCREW-ON SNAP-ON

GROUND PLANE SPACING	A DIM.	MATING ENGAGEMENT	
		SCREW-ON	SNAP-ON
1/16	.063	50-062-2210	51-062-2210
1/8	.125	50-062-2212	51-062-2212
1/4	.250	50-062-2214	51-062-2214

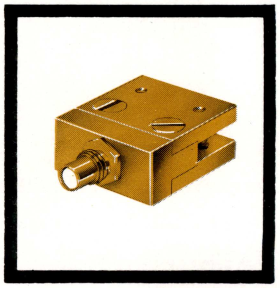

STRAIGHT END MOUNT PLUG

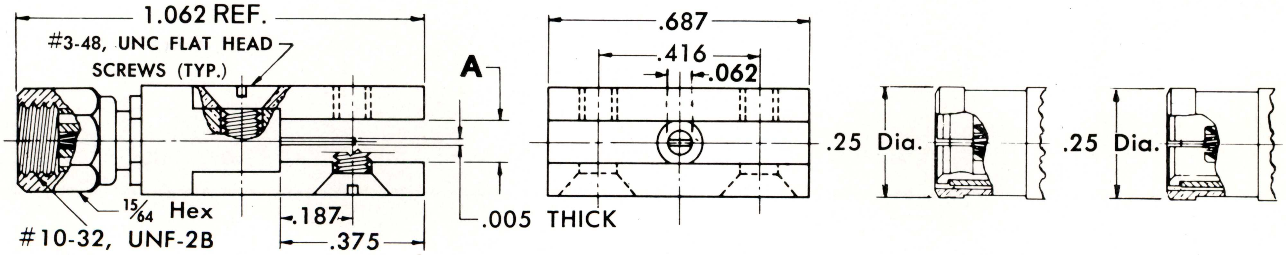

SCREW-ON SNAP-ON SLIDE-ON

GROUND PLANE SPACING	A DIM.	MATING ENGAGEMENT		
		SCREW-ON	SNAP-ON	SLIDE-ON
1/16	.063	50-059-2210	51-059-2210	52-059-2210
1/8	.125	50-059-2212	51-059-2212	52-059-2212
1/4	.250	50-059-2214	51-059-2214	52-059-2214

50 OHM HERMETICALLY SEALED BULKHEAD CONNECTORS

These hermetic units will provide excellent electrical through-bulkhead access while preserving the fluid or gas tight integrity of the inner spaces of the equipment.

For Applications requiring **Slide-on** connectors, specify the **Snap-on** units, as they will mate with any standard **Slide-on** plug.

FEATURES

1. True glass-to-metal hermetic seal.
2. Designed for "D" flat mounting and are provided with "O" Ring which can be removed if unit is to be soldered to bulkhead.
3. Steel body and contact with gold plating.

RECEPTACLE
REAR MOUNT

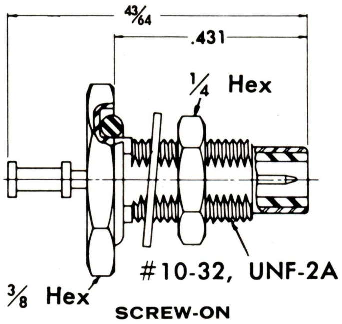

SCREW-ON
50-043-7000

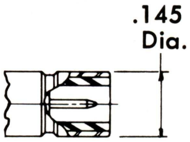

SNAP-ON
51-043-7000

JACK TO JACK ADAPTOR

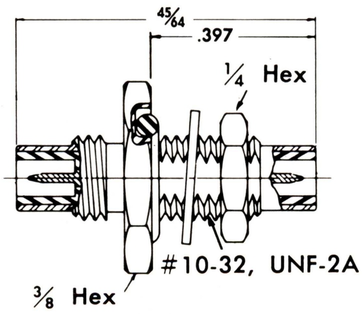

SCREW-ON
50-075-7000

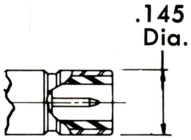

TYPICAL

SNAP-ON
51-075-7000

RECEPTACLE
FRONT MOUNT

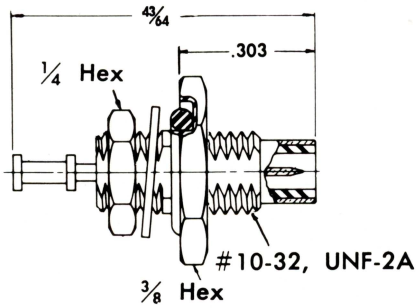

SCREW-ON
50-045-7000

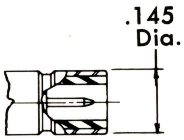

SNAP-ON
51-045-7000

SEE PAGE 53 FOR MOUNTING INFORMATION

50 OHM "T" ADAPTORS

"ConheX" "T" adaptors are normally supplied as free, unmounted units. Bulkhead or chassis mounting is accomplished by means of a mounting bracket which is available upon special request.

Snap-on jacks can be used in place of **Slide-on** jacks, as they will mate with all standard **Slide-on** plugs.

JACK-JACK-JACK

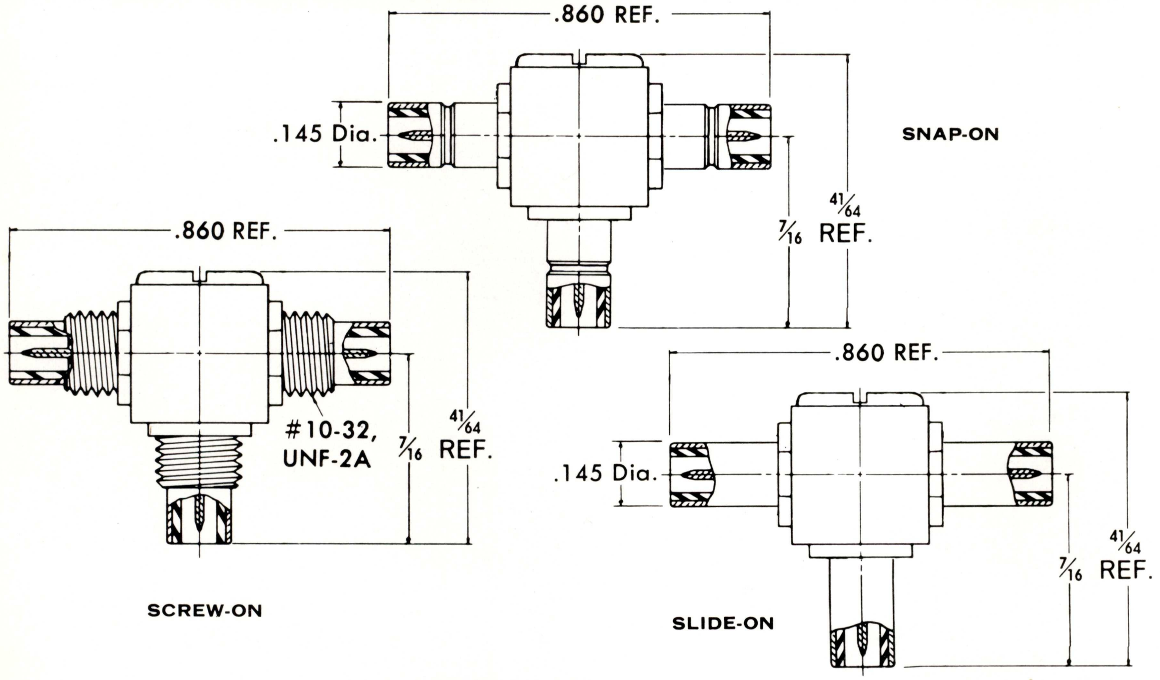

SCREW-ON	SNAP-ON	SLIDE-ON
50-083-0000	51-083-0000	52-083-0000

PLUG-PLUG-PLUG

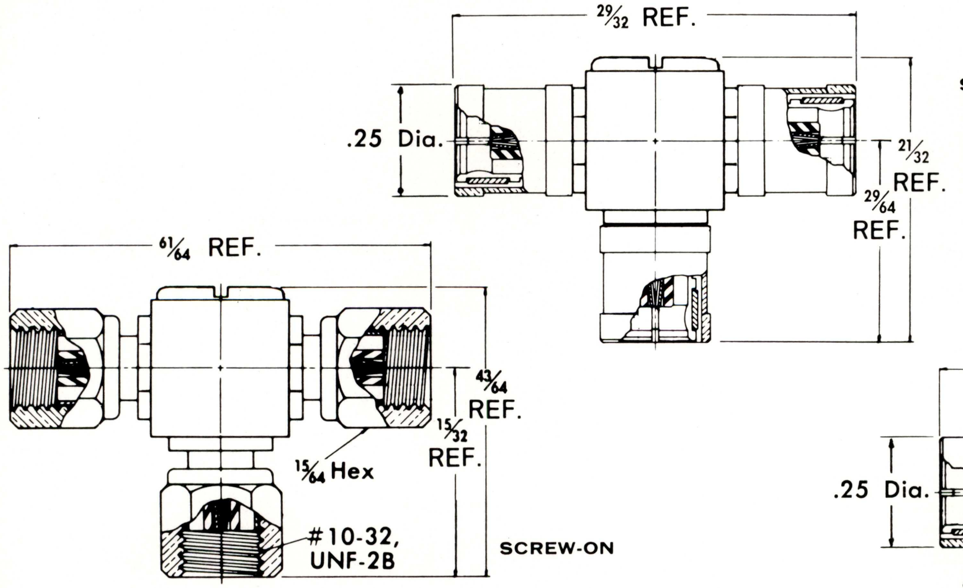

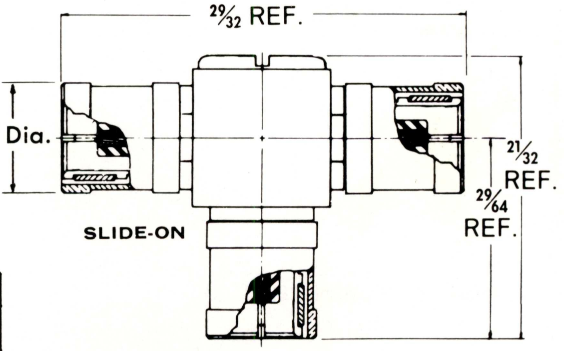

SCREW-ON	SNAP-ON	SLIDE-ON
50-084-0000	51-084-0000	52-084-0000

SEE PAGE 53 FOR MOUNTING INFORMATION

50 OHM "T" ADAPTORS

"ConheX" "T" adaptors are normally supplied as free, unmounted units. Bulkhead or chassis mounting is accomplished by means of a mounting bracket which is available upon special request.

Snap-on jacks can be used in place of **Slide-on** jacks, as they will mate with all standard **Slide-on** plugs.

JACK—PLUG—JACK

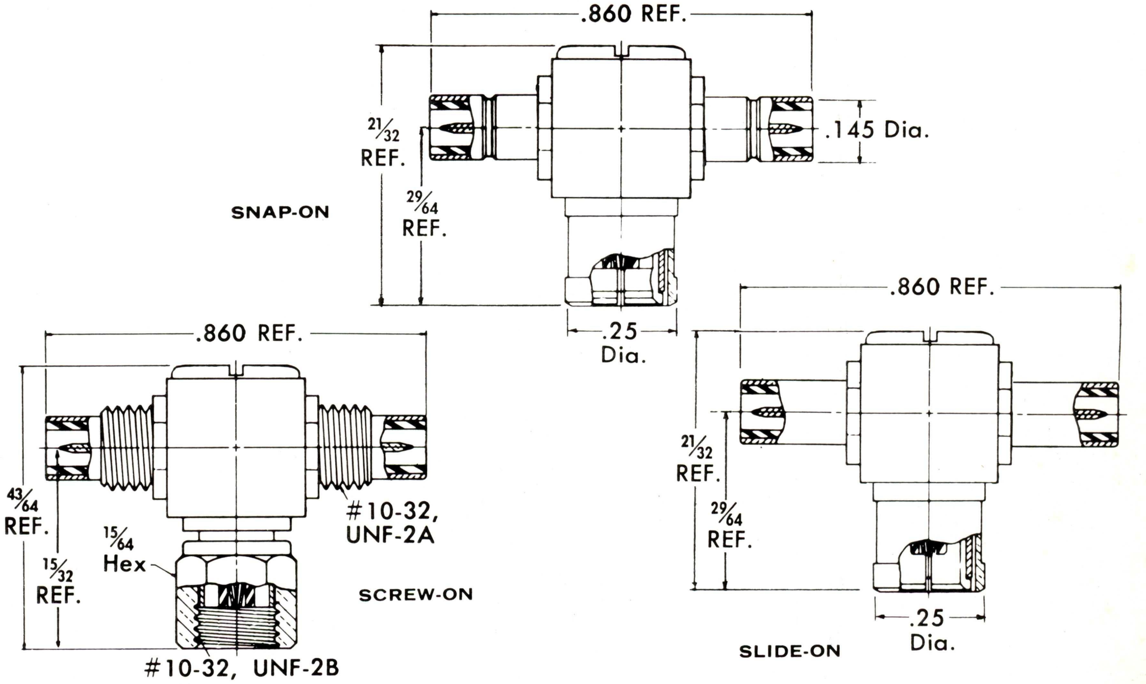

SCREW-ON	SNAP-ON	SLIDE-ON
50-085-0000	51-085-0000	52-085-0000

PLUG—JACK—PLUG

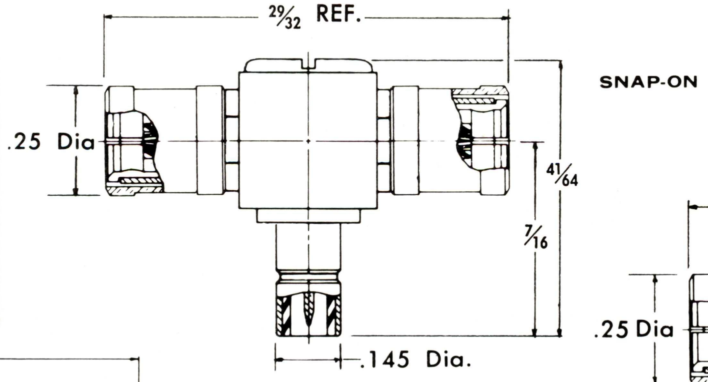

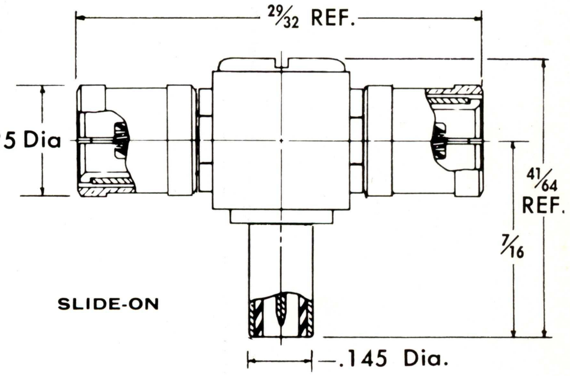

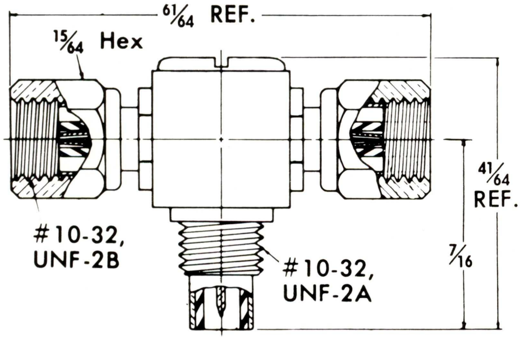

SCREW-ON	SNAP-ON	SLIDE-ON
50-086-0000	51-086-0000	52-086-0000

SEE PAGE 53 FOR MOUNTING INFORMATION

"ConheX" Cable Junction Blocks are normally supplied as free, unmounted units.

Bulkhead or chassis mounting is accomplished by means of a mounting bracket which is designated by last 4 digits 4800.

Snap-on jacks can be used in place of **Slide-on** jacks, as they will mate with all standard **Slide-on** plugs.

50 OHM CABLE JUNCTION BLOCKS CLAMP-TYPE

JUNCTION BLOCK WITH TWO CABLE CLAMPS AND ONE PLUG MATING END

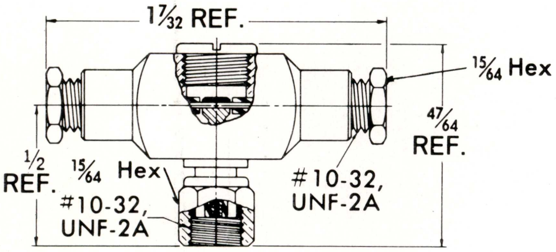

SCREW-ON

CABLE	SCREW-ON
RG-188/U; 316/U	50-067-0000

JUNCTION BLOCK WITH TWO CABLE CLAMPS AND ONE JACK MATING END

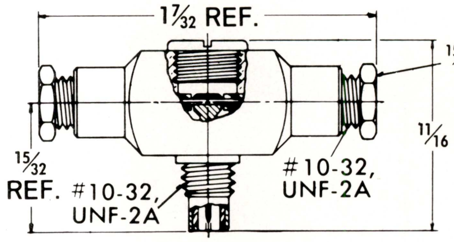

SCREW-ON

SNAP-ON

CABLE	SCREW-ON	SNAP-ON
RG-188/U; 316/U	50-068-0000	51-068-0000

"ConheX" Cable Junction Blocks are normally supplied as free, unmounted units.

Bulkhead or chassis mounting is accomplished by means of a mounting bracket which is designated by last 4 digits 4800.

Snap-on jacks can be used in place of **Slide-on** jacks, as they will mate with all standard **Slide-on** plugs.

50 OHM CABLE JUNCTION BLOCKS CRIMP-TYPE

JUNCTION BLOCK WITH TWO CABLE CRIMPS AND ONE PLUG MATING END

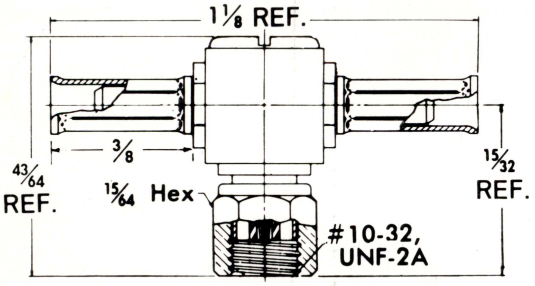

SCREW-ON

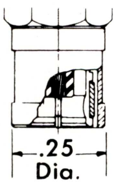

SNAP-ON

CABLE	SCREW-ON	SNAP-ON
RG-188/U; 316/U	50-070-0000	51-070-0000

JUNCTION BLOCK WITH TWO CABLE CRIMPS AND ONE JACK MATING END

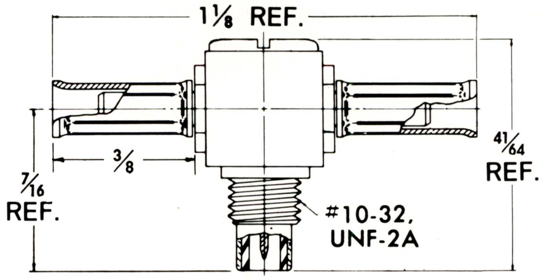

SCREW-ON

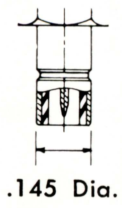

SNAP-ON

CABLE	SCREW-ON	SNAP-ON
RG-188/U; 316/U	50-071-0000	51-071-0000

SEE PAGE 11 FOR COMPLETE CABLE LISTING
SEE PAGE 53 FOR MOUNTING INFORMATION

50 OHM SUBMINIATURE ADAPTORS

"Conhex" subminiature adaptors are especially designed for applications where it is desired to connect two cable assemblies together and where compatible mating connectors are not available at the connection point.

Snap-on jacks can be used in place of **Slide-on** jacks, as they will mate with all standard **Slide-on** plugs.

BULKHEAD MOUNTING*
PLUG TO JACK

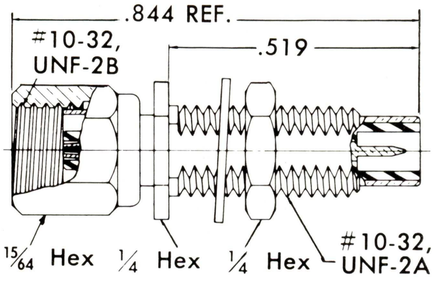

SCREW-ON
50-077-0000

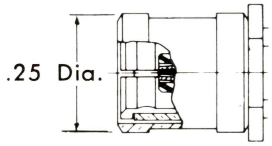

SNAP-ON
51-077-0000

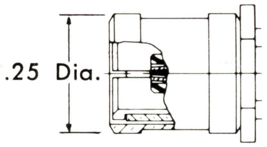

SLIDE-ON
52-077-0000

JACK TO JACK

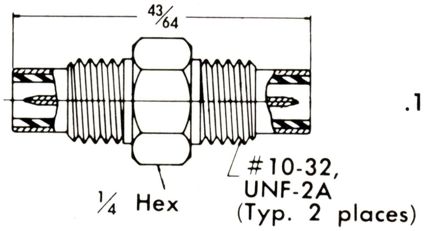

SCREW-ON
50-072-0000

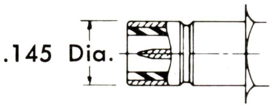

SNAP-ON
51-072-0000

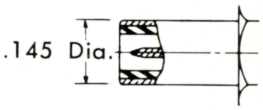

SLIDE-ON
52-072-0000

BULKHEAD MOUNTING*
JACK TO JACK

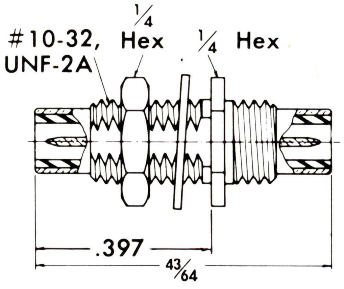

SCREW-ON
50-075-0000

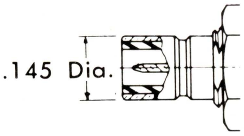

SNAP-ON
51-075-0000

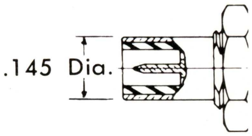

SLIDE-ON
52-075-0000

*Designed for .093" max. panel

For Between Series Adaptors Ask For Sealectro Cat. No. BSA

SEE PAGE 53 FOR MOUNTING INFORMATION

50 OHM SUBMINIATURE ADAPTORS

"Conhex" subminiature adaptors are especially designed for applications where it is desired to connect two cable assemblies together and where compatible mating connectors are not available at the connection point.

Adaptors from Screw-on to Snap-on, Screw-on to Slide-on, etc., are also available on special order.

PLUG TO PLUG

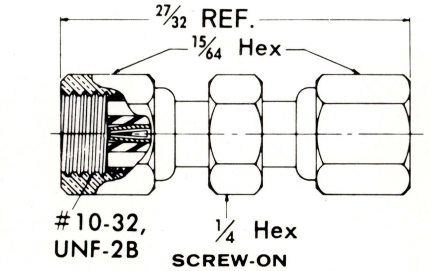

SCREW-ON
50-073-0000

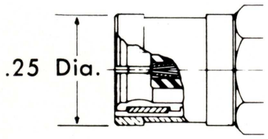

SNAP-ON
51-073-0000

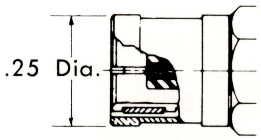

SLIDE-ON
52-073-0000

BULKHEAD MOUNTING* PLUG TO PLUG

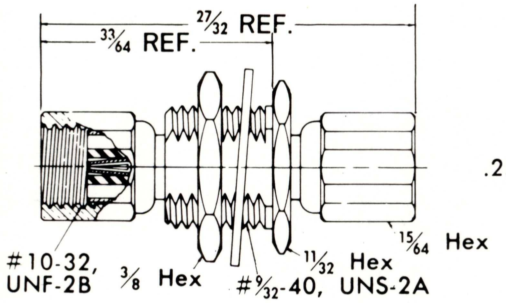

SCREW-ON
50-076-0000

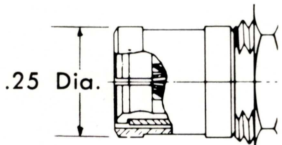

SNAP-ON
51-076-0000

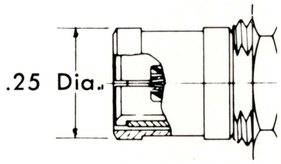

SLIDE-ON
52-076-0000

*Designed for .093" max. panel

RIGHT ANGLE JACK TO PLUG

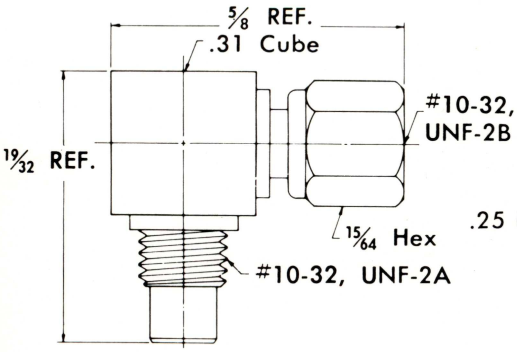

SCREW-ON
50-078-0000

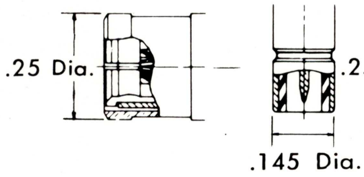

SNAP-ON
51-078-0000

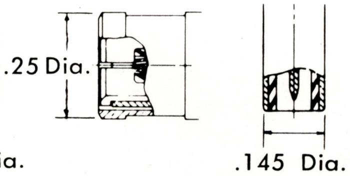

SLIDE-ON
52-078-0000

For Between Series Adaptors Ask For Sealectro Cat. No. BSA

SEE PAGE 53 FOR MOUNTING INFORMATION

75 OHM CABLE PLUGS
CLAMP - TYPE
FOR BRAIDED COAX

STRAIGHT

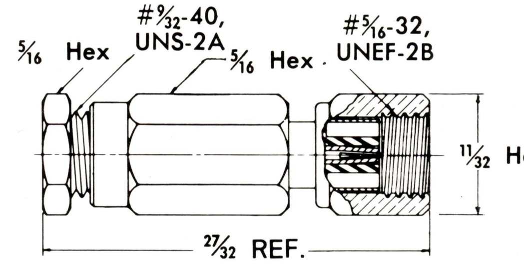

SCREW-ON

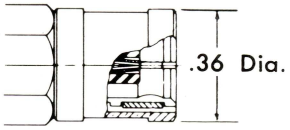

SNAP-ON

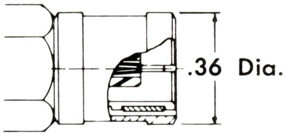

SLIDE-ON

CABLE	SCREW-ON	SNAP-ON	SLIDE-ON
RG-180/U; RG-195/U	50-107-0000	51-107-0000	52-107-0000

STRAIGHT BULKHEAD *

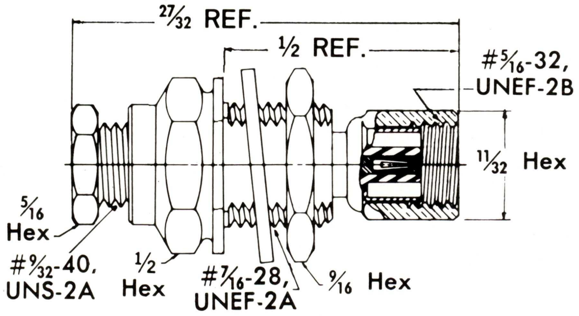

SCREW-ON

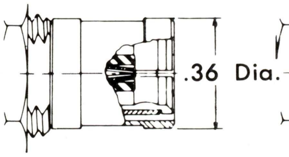

SNAP-ON

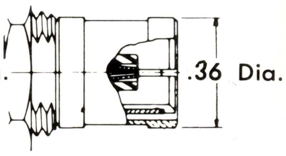

SLIDE-ON

*Designed for .093" max. panel

CABLE	SCREW-ON	SNAP-ON	SLIDE-ON
RG-180/U; RG-195/U	50-109-0000	51-109-0000	52-109-0000

RIGHT ANGLE

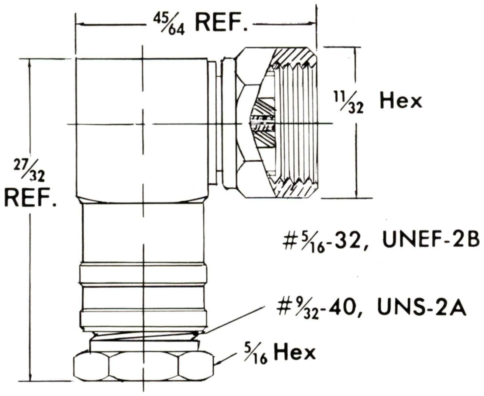

SCREW-ON

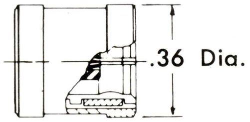

SNAP-ON

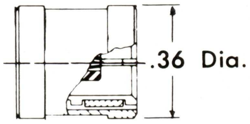

SLIDE-ON

CABLE	SCREW-ON	SNAP-ON	SLIDE-ON
RG-180/U; RG-195/U	50-111-9511	51-111-9511	52-111-9511

SEE PAGE 11 FOR COMPLETE CABLE LISTING
SEE PAGE 53 FOR MOUNTING INFORMATION

75 OHM CABLE JACKS
CLAMP-TYPE
FOR BRAIDED COAX

Snap-on jacks can be used in place of **Slide-on** jacks, as they will mate with **Slide-on** plugs.

STRAIGHT

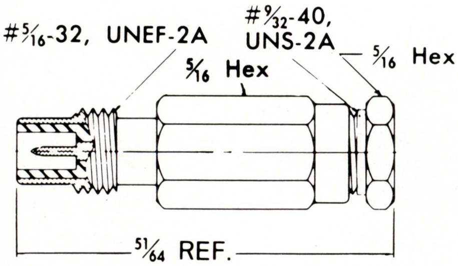

SCREW-ON

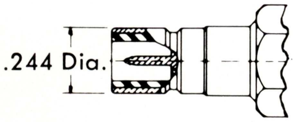

SNAP-ON

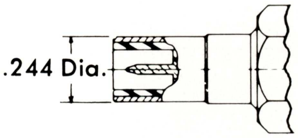

SLIDE-ON

CABLE	SCREW-ON	SNAP-ON	SLIDE-ON
RG-180/U; RG-195/U	50-108-0000	51-108-0000	52-108-0000

STRAIGHT BULKHEAD*

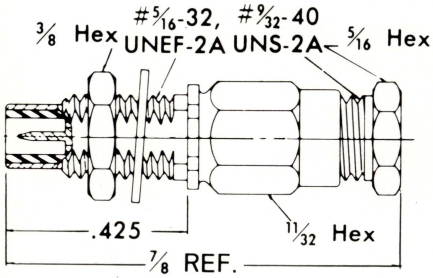

SCREW-ON

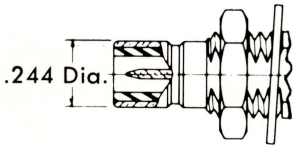

SNAP-ON

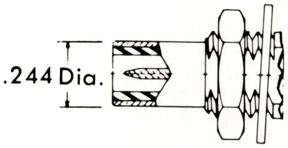

SLIDE-ON

CABLE	SCREW-ON	SNAP-ON	SLIDE-ON
RG-180/U; RG-195/U	50-110-0000	51-110-0000	52-110-0000

RIGHT ANGLE BULKHEAD*

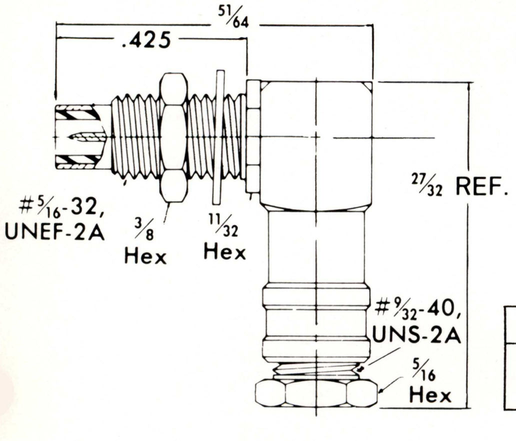

SCREW-ON

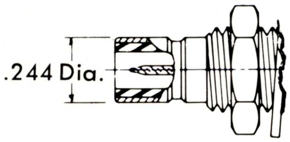

SNAP-ON

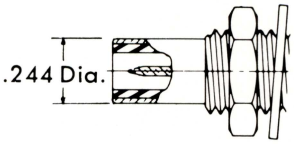

SLIDE-ON

CABLE	SCREW-ON	SNAP-ON	SLIDE-ON
RG-180/U, RG-195/U	50-112-0000	51-112-0000	52-112-0000

*Designed for .093" max. panel

SEE PAGE 11 FOR COMPLETE CABLE LISTING
SEE PAGE 53 FOR MOUNTING INFORMATION

75 OHM CABLE PLUGS
CRIMP- TYPE
FOR BRAIDED COAX

STRAIGHT

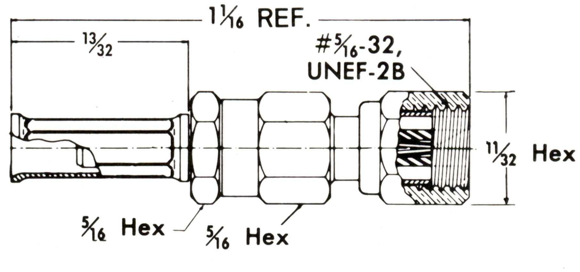

SCREW-ON

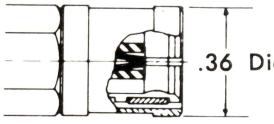

SNAP-ON

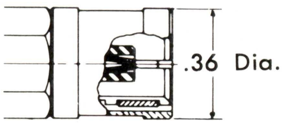

SLIDE-ON

CABLE	SCREW-ON	SNAP-ON	SLIDE-ON
RG-180/U; RG-195/U	50-124-0000	51-124-0000	52-124-0000

STRAIGHT BULKHEAD*

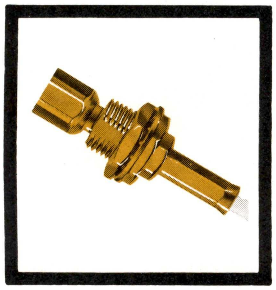

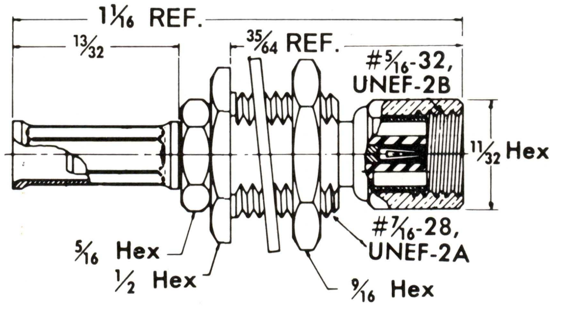

SCREW-ON

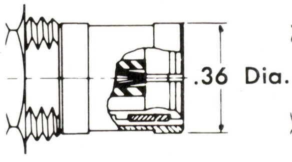

SNAP-ON

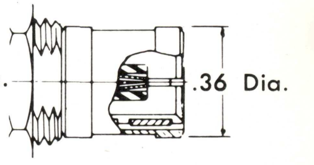

SLIDE-ON

*Designed for .093" max. panel

CABLE	SCREW-ON	SNAP-ON	SLIDE-ON
RG-180/U; RG-195/U	50-126-0000	51-126-0000	52-126-0000

RIGHT ANGLE

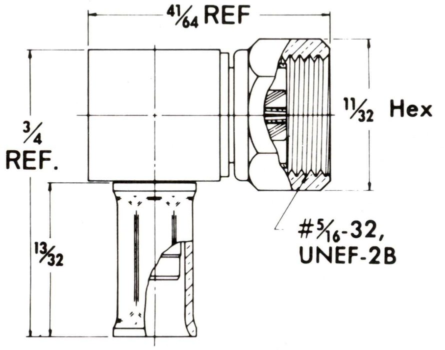

SCREW-ON

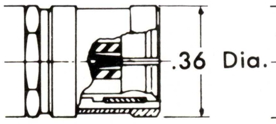

SNAP-ON

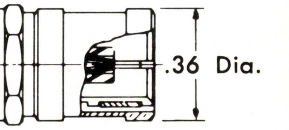

SLIDE-ON

CABLE	SCREW-ON	SNAP-ON	SLIDE-ON
RG-180/U; RG-195/U	50-128-9511	51-128-9511	52-128-9511

SEE PAGE 11 FOR COMPLETE CABLE LISTING
SEE PAGE 53 FOR MOUNTING INFORMATION

75 OHM CABLE JACKS
CRIMP-TYPE
FOR BRAIDED COAX

Snap-on jacks can be used in place of **Slide-on** jacks, as they will mate with **Slide-on** plugs.

STRAIGHT

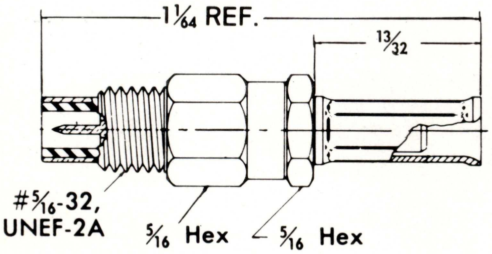

SCREW-ON

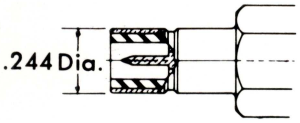

SNAP-ON

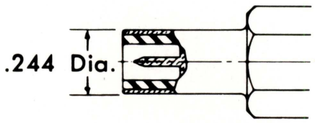

SLIDE-ON

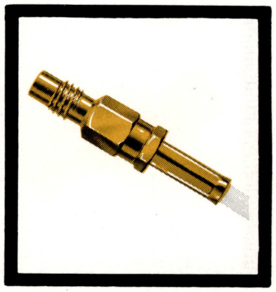

CABLE	SCREW-ON	SNAP-ON	SLIDE-ON
RG-180/U; RG-195/U	50-125-0000	51-125-0000	52-125-0000

STRAIGHT BULKHEAD*

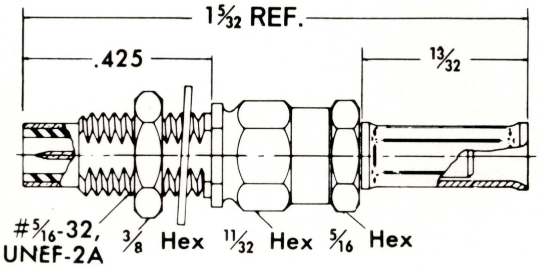

SCREW-ON

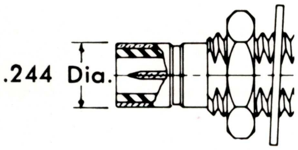

SNAP-ON

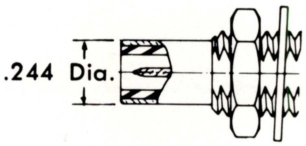

SLIDE-ON

CABLE	SCREW-ON	SNAP-ON	SLIDE-ON
RG-180/U; RG-195/U	50-127-0000	51-127-0000	52-127-0000

RIGHT ANGLE BULKHEAD*

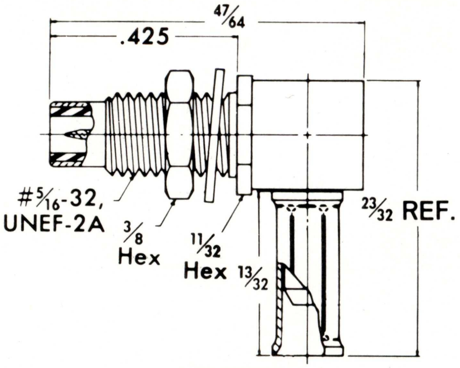

SCREW-ON

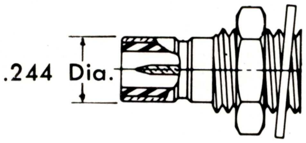

SNAP-ON

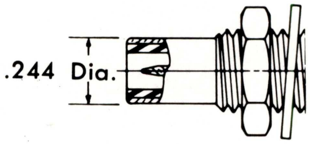

SLIDE-ON

CABLE	SCREW-ON	SNAP-ON	SLIDE-ON
RG-180/U; RG-195/U	50-130-0000	51-130-0000	52-130-0000

*Designed for .093" max. panel

SEE PAGE 11 FOR COMPLETE CABLE LISTING
SEE PAGE 53 FOR MOUNTING INFORMATION

75-OHM POSITIVE-LOCK CABLE PLUGS

These unique 75-Ohm cable plugs provide positive mate locking for heavy cable loading or installations subject to unmating forces. These units mate with standard 75-Ohm Snap-On jack unit and are interchangeable with most 75-Ohm cable plugs by merely unscrewing the usual Snap-On front end and screwing on the Positive-Lock mating unit. Mating is accomplished by pushing on knurled ring and pulling on knurled section to unmate. Cannot be unmated by pulling on cable.

STRAIGHT

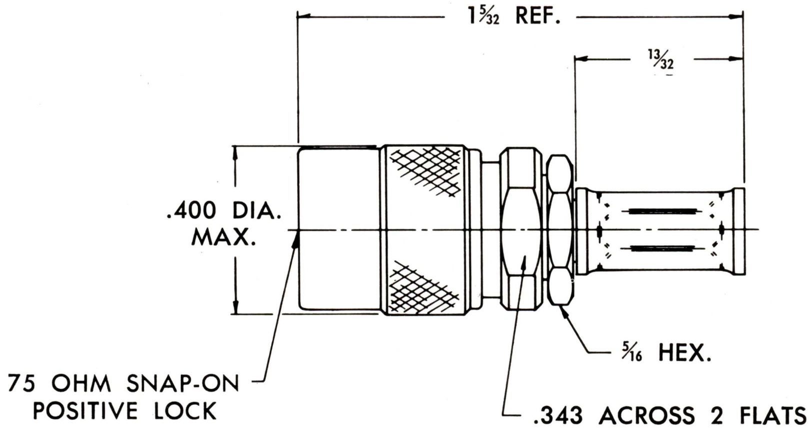

CABLE	POSI-LOCK, SNAP-ON
RG-180/U; RG-195/U	51-124-1195

RIGHT ANGLE

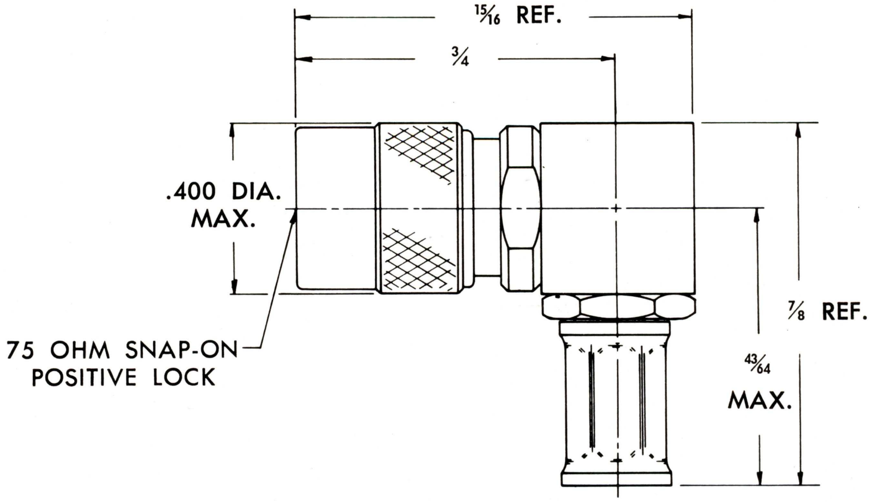

CABLE	POSI-LOCK, SNAP-ON
RG-180/U; RG-195/U	51-128-1195

SEE PAGE 11 FOR COMPLETE CABLE LISTING
SEE PAGE 53 FOR MOUNTING INFORMATION

75 OHM BULKHEAD* JACK RECEPTACLES

Snap-on jacks can be used in place of **Slide-on** jacks, as they will mate with **Slide-on** plugs.

REAR MOUNT

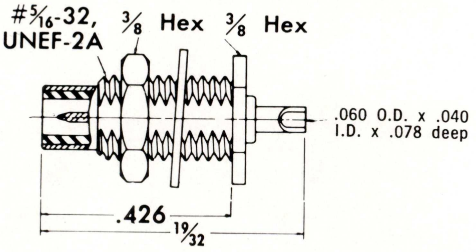

SCREW-ON

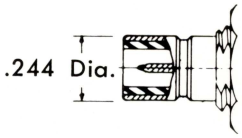

SNAP-ON

SCREW-ON	SNAP-ON	SLIDE-ON
50-143-0000	51-143-0000	52-143-0000

FRONT MOUNT

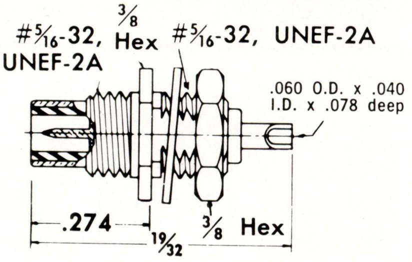

SCREW-ON

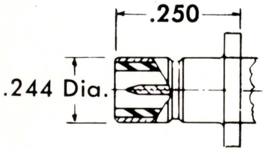

SNAP-ON

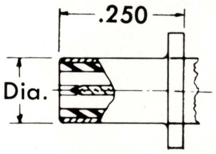

SLIDE-ON

SCREW-ON	SNAP-ON	SLIDE-ON
50-145-0000	51-145-0000	52-145-0000

RIGHT ANGLE

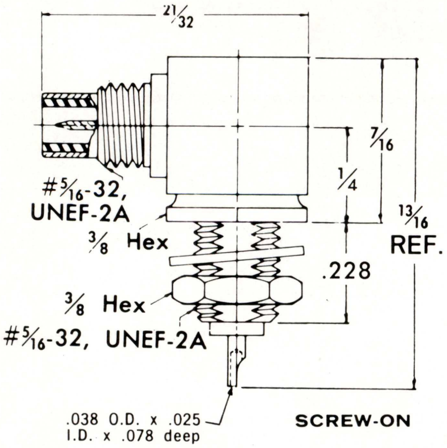

SCREW-ON

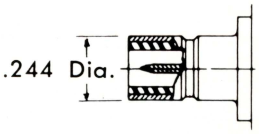

SNAP-ON

SCREW-ON	SNAP-ON	SLIDE-ON
50-147-0000	51-147-0000	52-147-0000

*Designed for .093" max. panel

SEE PAGE 53 FOR MOUNTING INFORMATION

75 OHM BULKHEAD*
PLUG RECEPTACLES

REAR MOUNT

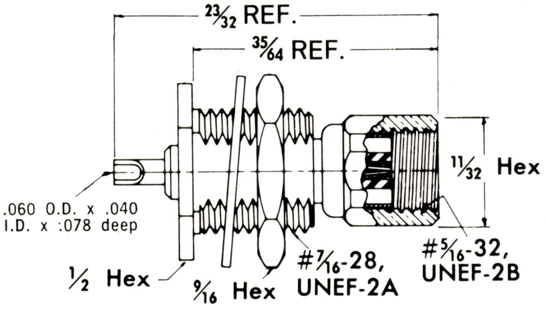

SCREW-ON

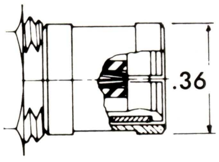

SNAP-ON

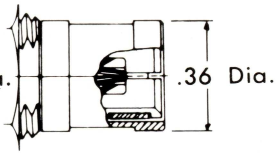

SLIDE-ON

SCREW-ON	SNAP-ON	SLIDE-ON
50-144-0000	51-144-0000	52-144-0000

FRONT MOUNT

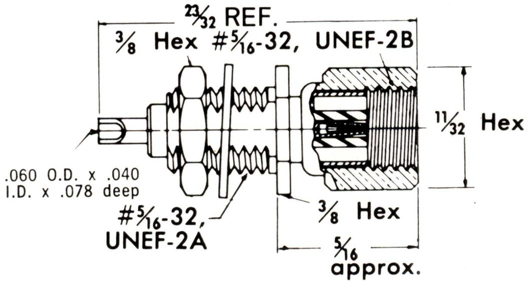

SCREW-ON

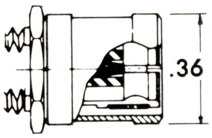

SNAP-ON

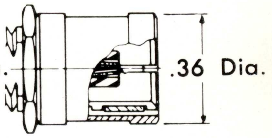

SLIDE-ON

SCREW-ON	SNAP-ON	SLIDE-ON
50-146-0000	51-146-0000	52-146-0000

RIGHT ANGLE

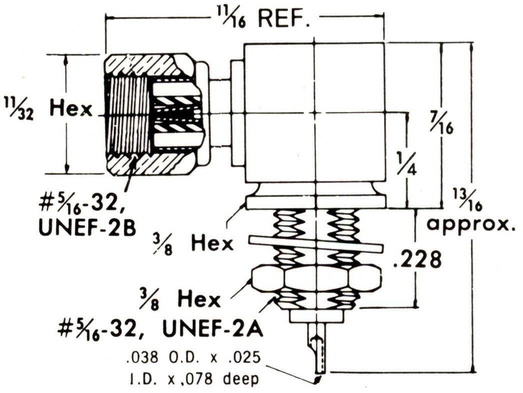

SCREW-ON

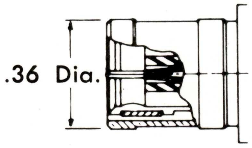

SNAP-ON

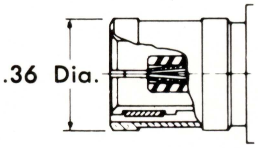

SLIDE-ON

SCREW-ON	SNAP-ON	SLIDE-ON
50-148-0000	51-148-0000	52-148-0000

*Designed for .093" max. panel

SEE PAGE 53 FOR MOUNTING INFORMATION

75 OHM RECESSED BULKHEAD* CABLE JACKS AND RECEPTACLES

Standard 75 ohm Crimp-Type connectors (-0000) accept: RG-180/U, 195/U and Surprenant #9872 cables.

Snap-on jacks can be used in place of **Slide-on** jacks, as they will mate with **Slide-on** plugs.

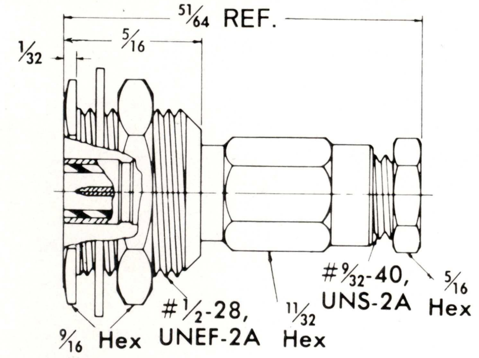

RECESSED CLAMP TYPE CABLE JACK

CABLE	SNAP-ON
RG-180/U; 195/U	51-115-0000

Note: For Round Hole Mounting

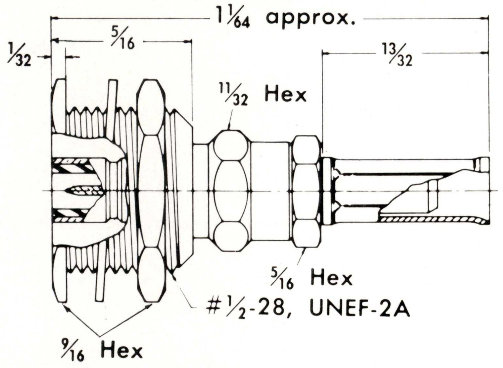

RECESSED CRIMP TYPE CABLE JACK

CABLE	SNAP-ON
RG-180/U; 195/U	51-133-0000

Note: For Round Hole Mounting

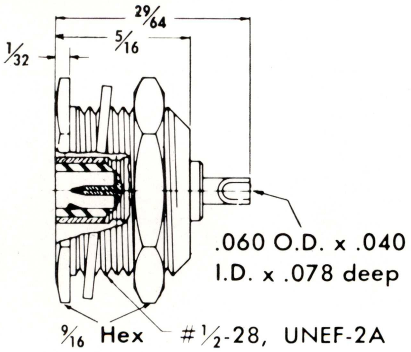

RECESSED JACK RECEPTACLE

SNAP-ON
51-149-0000

Note: For Round Hole Mounting

*Designed for .093" max. panel

SEE PAGE 11 FOR COMPLETE CABLE LISTING
SEE PAGE 53 FOR MOUNTING INFORMATION

75 OHM PRINTED CIRCUIT PLUG & JACK RECEPTACLES

These receptacles are particularly useful where it is desired to have a breakable cable-to-circuit connection in which the ground is carried to the circuit and the center conductor or signal circuit is carried to some further internal circuitry.

Snap-on jacks can be used in place of **Slide-on** jacks, as they will mate with **Slide-on** plugs.

STRAIGHT JACK RECEPTACLE

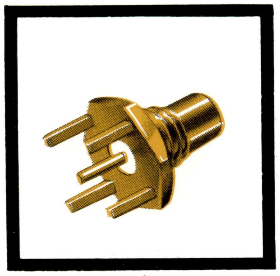

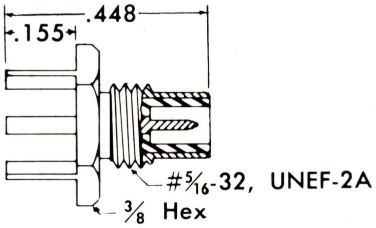

SCREW-ON
50-151-0000

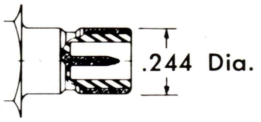

SNAP-ON
51-151-0000

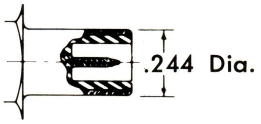

SLIDE-ON
52-151-0000

RIGHT ANGLE JACK RECEPTACLE

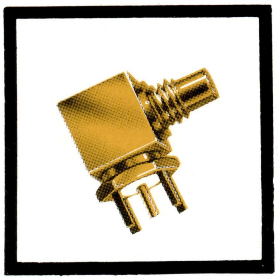

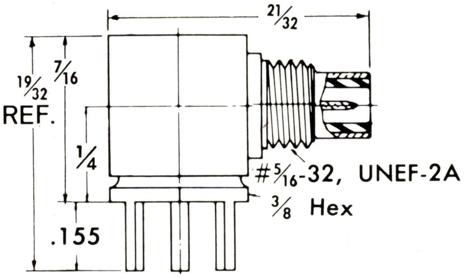

SCREW-ON
50-153-0000

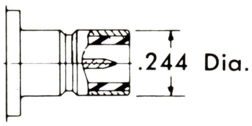

SNAP-ON
51-153-0000

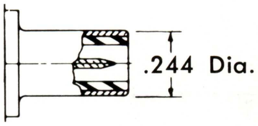

SLIDE-ON
52-153-0000

STRAIGHT PLUG RECEPTACLE

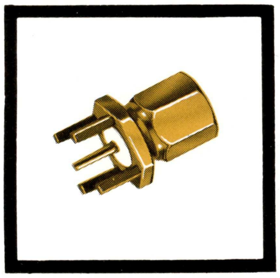

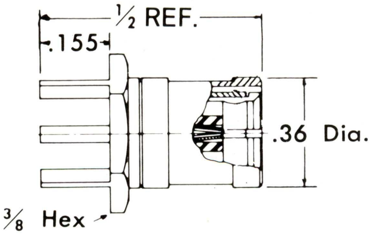

SNAP-ON
51-152-0000

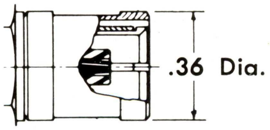

SLIDE-ON
52-152-0000

RIGHT ANGLE PLUG RECEPTACLE

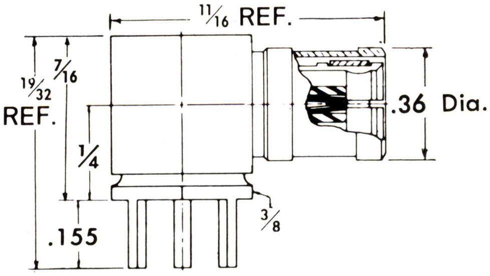

SNAP-ON
51-154-0000

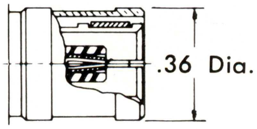

SLIDE-ON
52-154-0000

SEE PAGE 53 FOR MOUNTING INFORMATION

75 OHM STRIPLINE CONNECTORS SURFACE MOUNTING

"ConheX" Subminiature Stripline Connectors are designed for use with single and multiple layer stripline modules. Careful attention has been given to design so as to provide complete impedance matching within the shell or body of the connector. Properly mounted on a stripline package, these connectors will allow you to realize the full advantages of stripline circuitry.

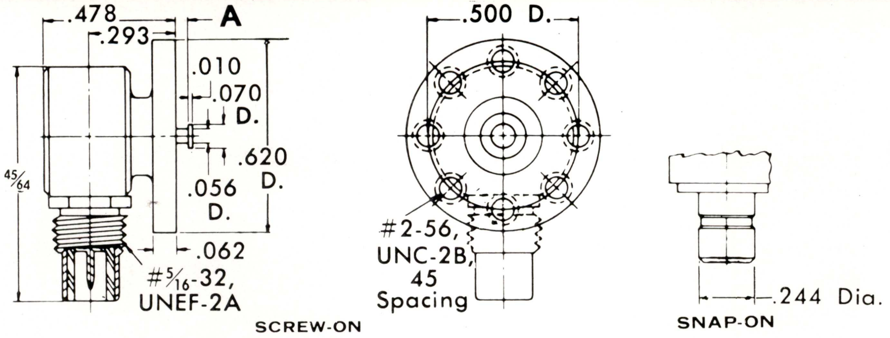

RIGHT ANGLE JACK

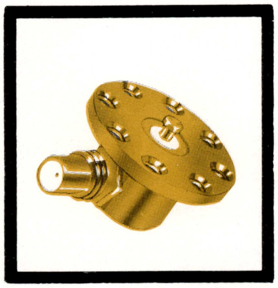

GROUND PLANE SPACING	A DIM.	CONTACT STYLE	PART NUMBER	
			SCREW-ON	SNAP-ON
1/16	.031	Captivated Without Turret	50-158-2210	51-158-2210
		Removable With Turret	50-158-2211	51-158-2211
1/8	.063	Captivated Without Turret	50-158-2212	51-158-2212
		Removable With Turret	50-158-2213	51-158-2213
1/4	.125	Captivated Without Turret	50-158-2214	51-158-2214
		Removable With Turret	50-158-2215	51-158-2215

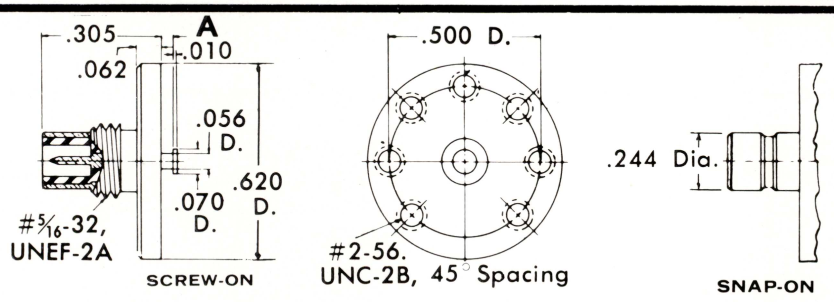

STRAIGHT JACK

GROUND PLANE SPACING	A DIM.	CONTACT STYLE	PART NUMBER	
			SCREW-ON	SNAP-ON
1/16	.031	Captivated Without Turret	50-156-2210	51-156-2210
		Removable With Turret	50-156-2211	51-156-2211
1/8	.063	Captivated Without Turret	50-156-2212	51-156-2212
		Removable With Turret	50-156-2213	51-156-2213
1/4	.125	Captivated Without Turret	50-156-2214	51-156-2214
		Removable With Turret	50-156-2215	51-156-2215

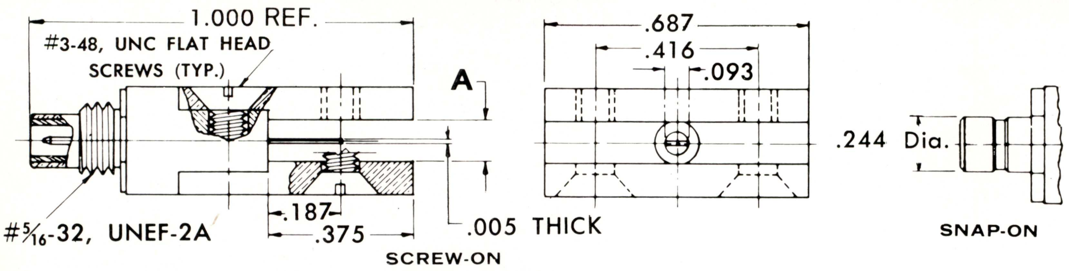

STRAIGHT END MOUNT JACK

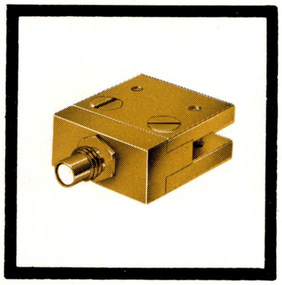

GROUND PLANE SPACING	A DIM.	MATING ENGAGEMENT	
		SCREW-ON	SNAP-ON
1/16	.063	50-162-2210	51-162-2210
1/8	.125	50-162-2212	51-162-2212
1/4	.250	50-162-2214	51-162-2214

75 OHM HERMETICALLY SEALED BULKHEAD CONNECTORS

These hermetic units will provide excellent electrical through-bulkhead access while preserving the fluid or gas tight integrity of the inner spaces of the equipment.

Snap-on jacks can be used in place of **Slide-on** jacks, as they will mate with **Slide-on** plugs.

FEATURES

1. True glass-to-metal hermetic seal.
2. Designed for "D" flat mounting and are provided with "O" Ring which can be removed if unit is to be soldered to bulkhead.
3. Steel body and contact with gold plating.

RECEPTACLE
REAR MOUNT

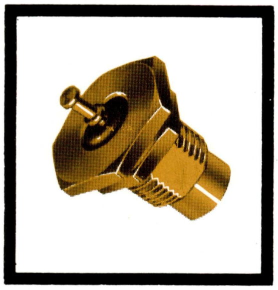

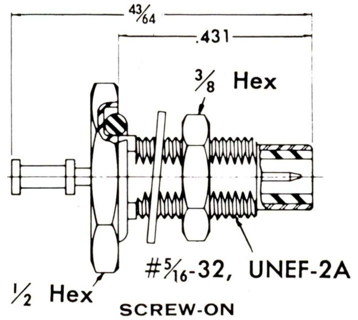

SCREW-ON
50-143-7000

SNAP-ON SLIDE-ON
51-143-7000

JACK TO JACK ADAPTOR

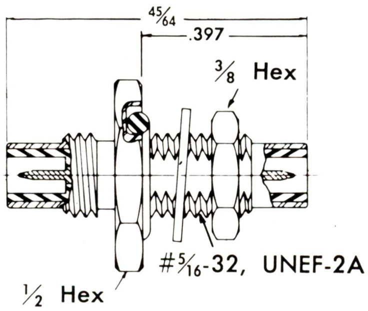

SCREW-ON
50-175-7000

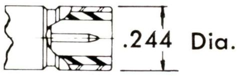

TYPICAL
SNAP-ON SLIDE-ON
51-175-7000

RECEPTACLE
FRONT MOUNT

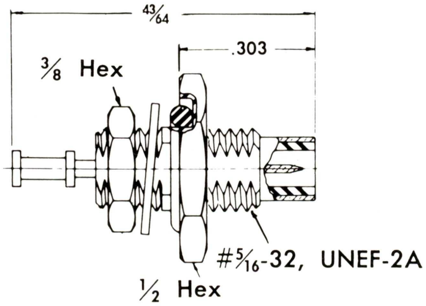

SCREW-ON
50-145-7000

SNAP-ON SLIDE-ON
51-145-7000

SEE PAGE 53 FOR MOUNTING INFORMATION

75 OHM "T" ADAPTORS

"ConheX" "T" adaptors are normally supplied as free, unmounted units. Bulkhead or chassis mounting is accomplished by means of a mounting bracket which is available upon special request.

Snap-on jacks can be used in place of **Slide-on** jacks, as they will mate with all standard **Slide-on** plugs.

JACK - JACK - JACK

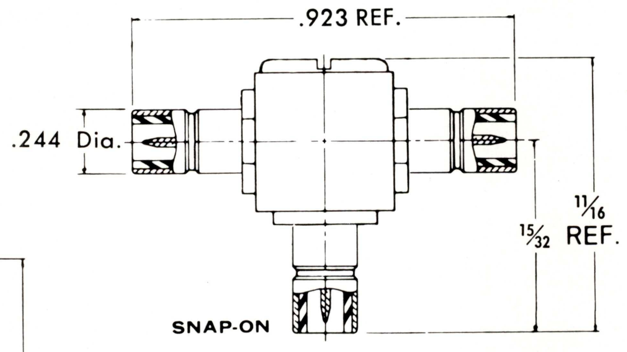

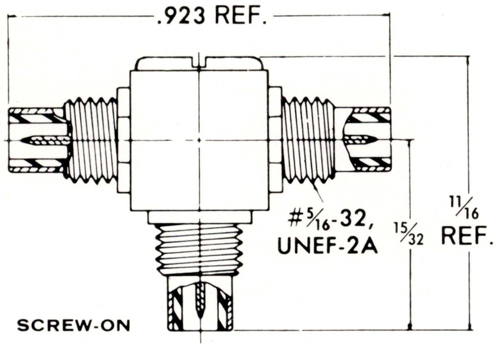

SCREW-ON	SNAP-ON
50-183-0000	51-183-0000

PLUG - PLUG - PLUG

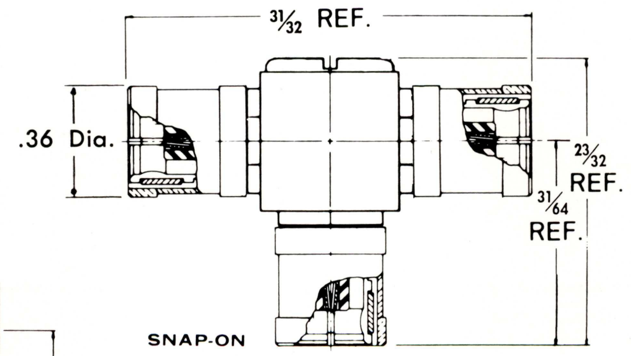

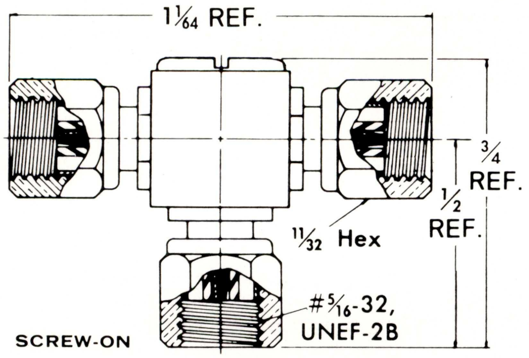

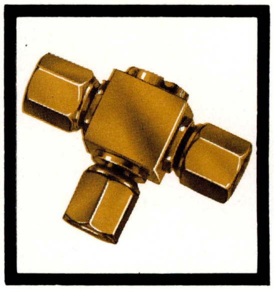

SCREW-ON	SNAP-ON
50-184-0000	51-184-0000

For Between Series Adaptors Ask For Sealectro Cat. No. BSA

SEE PAGE 53 FOR MOUNTING INFORMATION

75 OHM CABLE JUNCTION BLOCKS CLAMP-TYPE

"ConheX" Cable Junction Blocks are normally supplied as free, unmounted units.

Bulkhead or chassis mounting is accomplished by means of a mounting bracket which is available upon special request.

Snap-on jacks can be used in place of **Slide-on** jacks, as they will mate with all standard **Slide-on** plugs.

JUNCTION BLOCK WITH TWO CABLE CLAMPS AND ONE PLUG MATING END

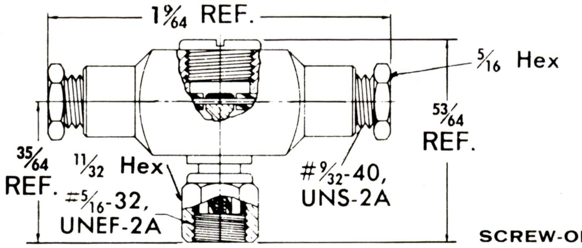

SCREW-ON

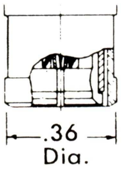

SNAP-ON

SCREW-ON	SNAP-ON
50-167-0000	51-167-0000

JUNCTION BLOCK WITH TWO CABLE CRIMPS AND ONE PLUG MATING END

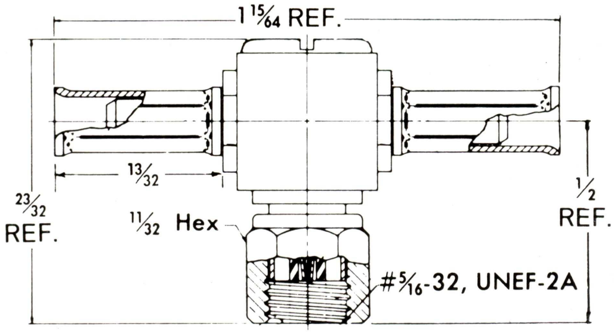

SCREW-ON

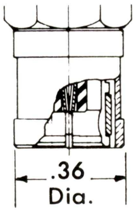

SNAP-ON

SCREW-ON	SNAP-ON
50-170-0000	51-170-0000

JUNCTION BLOCK WITH TWO CABLE CRIMPS AND ONE JACK MATING END

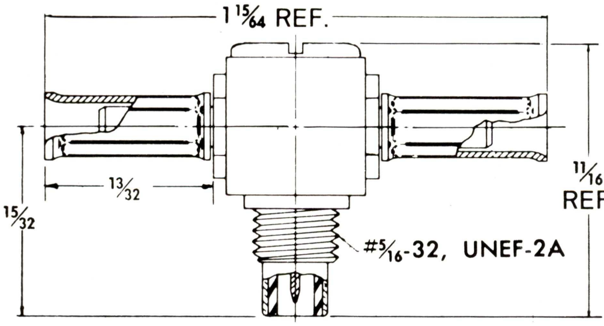

SCREW-ON

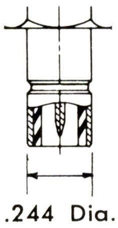

SNAP-ON

SCREW-ON	SNAP-ON
50-171-0000	51-171-0000

SEE PAGE 11 FOR COMPLETE CABLE LISTING
SEE PAGE 53 FOR MOUNTING INFORMATION

75 OHM "T" ADAPTORS

"ConheX" "T" adaptors are normally supplied as free, unmounted units. Bulkhead or chassis mounting is accomplished by means of a mounting bracket which is available upon special request.

Snap-on jacks can be used in place of **Slide-on** jacks, as they will mate with all standard **Slide-on** plugs.

JACK—PLUG—JACK

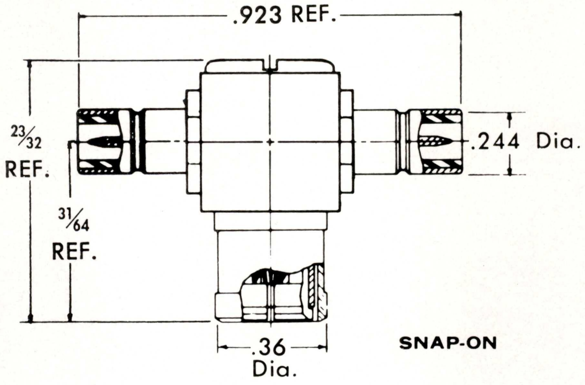

SNAP-ON

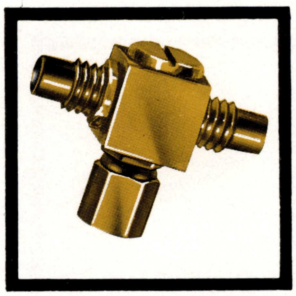

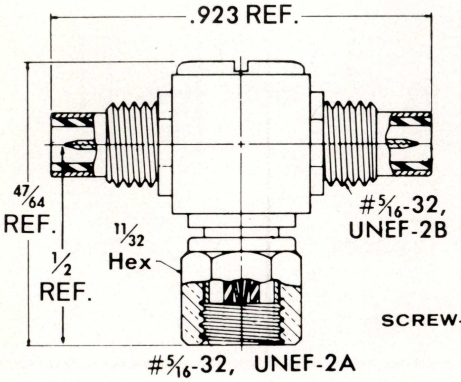

SCREW-ON

SCREW-ON	SNAP-ON
50-185-0000	51-185-0000

PLUG—JACK—PLUG

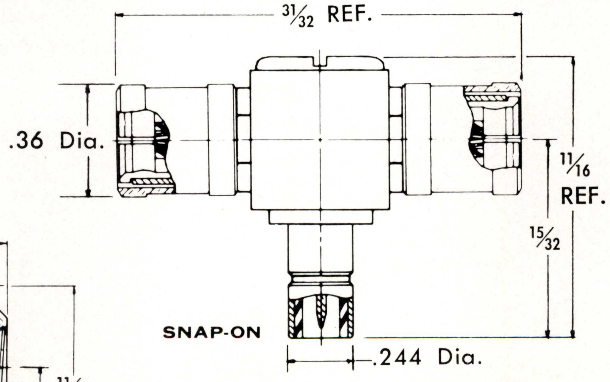

SNAP-ON

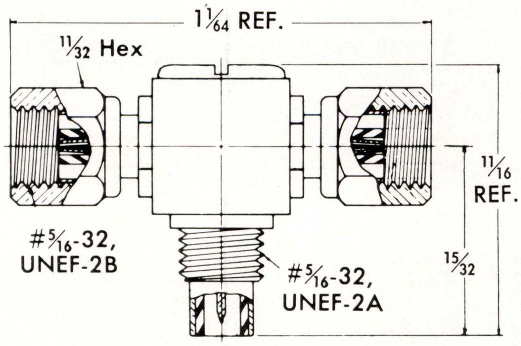

SCREW-ON

SCREW-ON	SNAP-ON
50-186-0000	51-186-0000

For Between Series Adaptors Ask For Sealectro Cat. No. BSA

SEE PAGE 53 FOR MOUNTING INFORMATION

75 OHM SUBMINIATURE ADAPTORS

"ConheX" subminiature adaptors are especially designed for applications where it is desired to connect two cable assemblies together and where compatible mating connectors are not available at the connection point.

PLUG TO PLUG

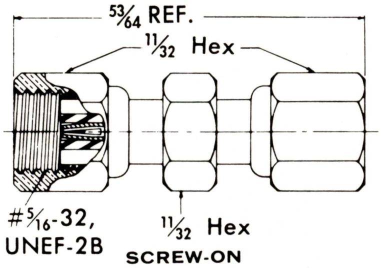

SCREW-ON
50-173-0000

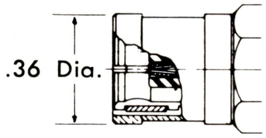

SNAP-ON
51-173-0000

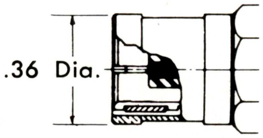

SLIDE-ON
52-173-0000

RIGHT ANGLE JACK TO PLUG

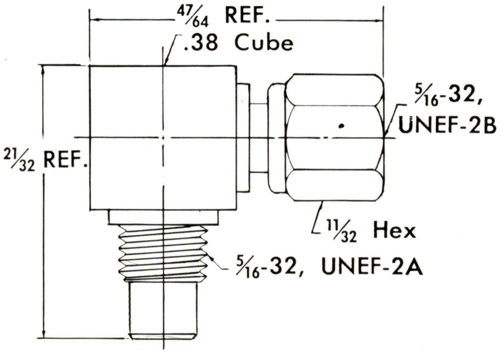

SCREW-ON
50-178-0000

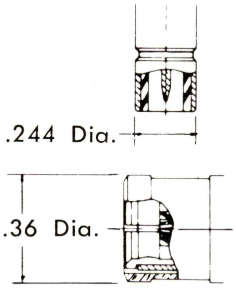

SNAP-ON
51-178-0000

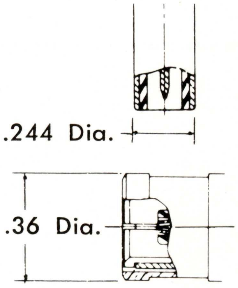

SLIDE-ON
52-178-0000

BETWEEN SERIES ADAPTORS

Separate Catalog available on:

- ✻ SMB
- ✻ SMC
- ✻ KWICK KONNECT
- ✻ NANOHEX
- ✻ APC 7
- ✻ GR 900
- ✻ GR 874
- ✻ N
- ✻ BNC
- ✻ TNC

SEE PAGE 53 FOR MOUNTING INFORMATION

"Conhex" subminiature adaptors are especially designed for applications where it is desired to connect two cable assemblies together and where compatible mating connectors are not available at the connection point.

Snap-on jacks can be used in place of **Slide-on** jacks, as they will mate with **Slide-on** plugs.

Adaptors from Screw-on to Snap-on, Screw-on to Slide-on, etc., are also available on special order.

75 OHM SUBMINIATURE ADAPTORS

BULKHEAD MOUNTING* PLUG TO JACK

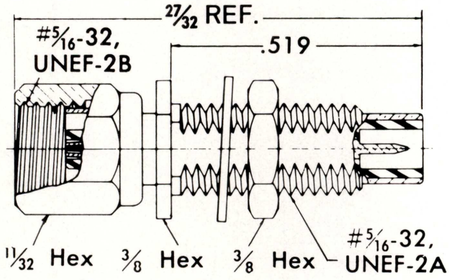

SCREW-ON
50-177-0000

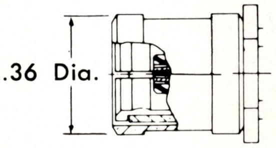

SNAP-ON SLIDE-ON
51-177-0000

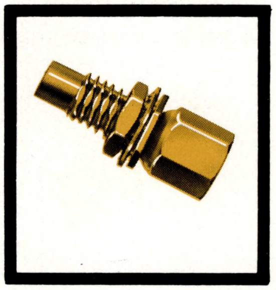

JACK TO JACK

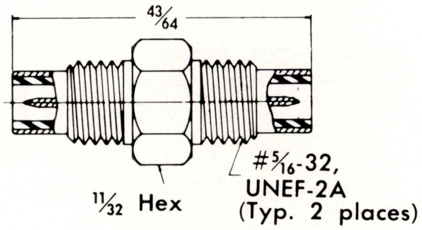

SCREW-ON
50-172-0000

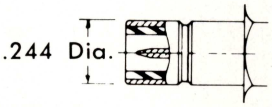

SNAP-ON SLIDE-ON
51-172-0000

BULKHEAD MOUNTING* JACK TO JACK

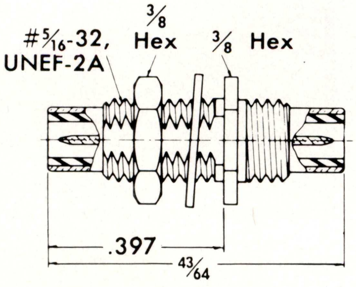

SCREW-ON
50-175-0000

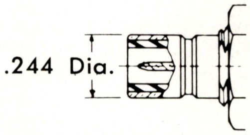

SNAP-ON SLIDE-ON
51-175-0000

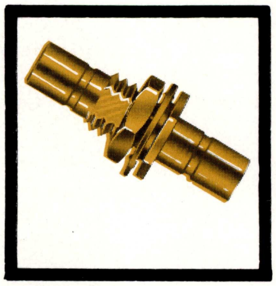

*Designed for .093" max. panel

SEE PAGE 53 FOR MOUNTING INFORMATION

For Between Series Adaptors Ask For Sealectro Cat. No. BSA

MICROWAVE DEVICES

The precision terminations, attenuators and filters shown below are standard catalog items available from stock.

Other microwave devices including directional couplers, power dividers, and hybrid junctions can also be provided on special order.

PRECISION TERMINATIONS

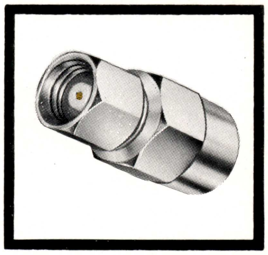

Sealectro's 50 ohm precision terminations are compact fixed coaxial loads for terminating coaxial transmission lines. Their small size and light weight combined with low VSWR allow numerous applications in both measurements and systems use.

Other mating engagements are available on special request. Contact factory for part numbers and specifications of units other than those listed.

VSWR — 1.05: 1 Max. DC — 1 GHz, 1.15:1 Max. 1-2 GHz, 1.30 Max. 2-12.4 GHz.

MATING END	MATING ENGAGEMENT		
	SCREW-ON	SNAP-ON	SLIDE-ON
PLUG P/N	60-001-0000-89	61-001-0000-89	62-001-0000-89
JACK P/N	60-002-0000-89	61-002-0000-89	

PRECISION ATTENUATORS

Sealectro's broadband 50 ohm coaxial attenuators are designed for use in applications requiring fixed accurately known attenuation or where isolation of any portion of a 50 ohm coaxial circuit is needed.

Values other than those shown are available on special request, as are other mating configurations. Contact factory for part numbers and specifications of units other than those listed.

ATTENUATION	PART NUMBER	VSWR
3dB±0.3dB	60-074-1003	1.15:1 max. DC —4GHz 1:20:1 max. 4-8GHz 1.25:1 max. 8-12.4GHz
6dB±0.3dB	60-074-1006	
10dB±0.6dB	60-074-1010	
20dB±1.0dB	60-074-1020	

SPECIFICATIONS:

Mating Engagement: ConheX, 50 ohm Screw-on plug and jack.
Material: Gold-plated brass
Power Rating: 2.0 watts average, 500 watts peak (Maximum rated average power to 25°C ambient temperature). Derated linearly to 1 watt at 75°C and 0.0 watts at 125°C.

Power Sensitivity: <.001 dB/dB/watt

Temperature Sensitivity: <.0001 dB/dB/°C

Physical Size: .360″ maximum diameter x 1.450″ maximum long

HIGH FREQUENCY LOW-PASS FILTERS

For applications where it becomes desirable to prevent and eliminate spurious radiation, Sealectro can incorporate low-pass filter functions in ConheX connectors.

A typical unit is the 60-043-2039 illustrated. The 50 ohm Screw-on jack receptacle is designed for bulkhead mounting. It features a minimum attenuation of 45 dB from 0.2 to 2.0 GHz. A typical attenuation curve is shown at right.

Units with other mating engagements or attenuation characteristics are available on special request. Contact factory for part numbers and specifications.

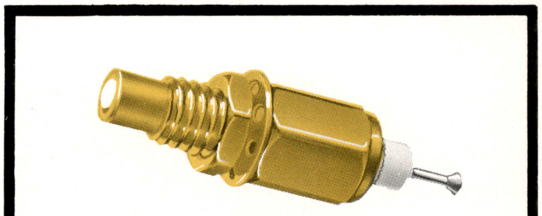

60-043-2039

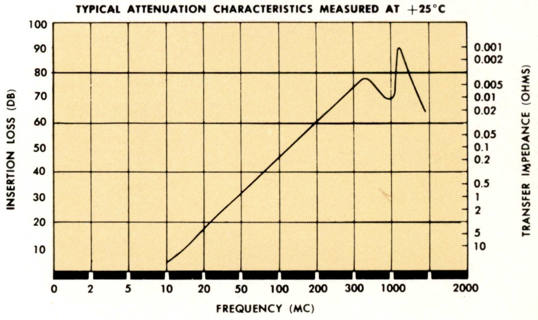

RESISTIVE TERMINATIONS SHORTING PLUGS and DUST CAPS

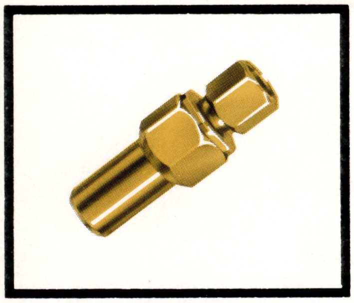

60-001-0501

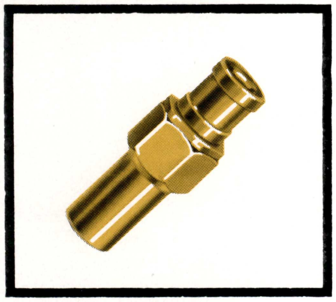

61-001-0501

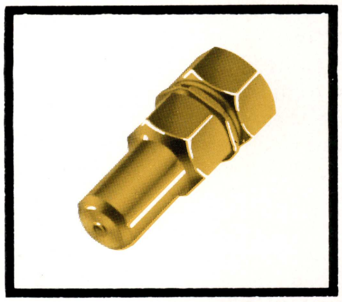

60-101-0502

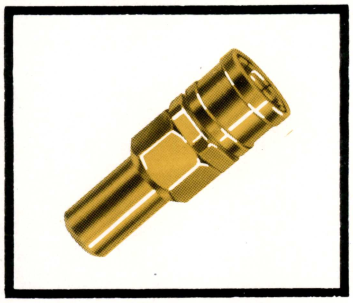

61-101-0502

"ConheX" Resistive Terminations are designed to terminate low frequency coaxial lines in their proper characteristic impedances. Although these units use standard carbon composition resistors, consideration for moderate frequency use (1,000 MHz) was allowed, resulting in maximum allowable power dissipation for the subminiature size of the units. The selection listed below is typical of the many designs which we manufacture. If the termination for your particular application is not listed or if you require high frequency precision terminations utilizing carbon or metal film resistors in tuned cavities, please consult page **46**.

COAXIAL PLUG TYPE RESISTIVE TERMINATIONS

Value	MATING ENGAGEMENT			
	50 OHM		75 OHM	
	Screw-on	Snap-on	Screw-on	Snap-on
51±1%	60-001-0101	61-001-0101	60-101-0101	61-101-0101
51±5%	60-001-0501	61-001-0501	60-101-0501	61-101-0501
75±1%	60-001-0102	61-001-0102	60-101-0102	61-101-0102
75±5%	60-001-0502	61-001-0502	60-101-0502	61-101-0502
1000±5%	60-001-0518	61-001-0518	60-101-0518	61-101-0518
No Resistor	60-001-0900	61-001-0900	60-101-0900	61-101-0900

Resistive terminations can be supplied with retaining chains by replacing the sixth digit with "4" i.e.: 60-001-4101

DUST CAPS and SHORTING PLUGS

"Sealectro" manufactures a complete line of 50 and 75 ohm Screw-on, Snap-on and Slide-on Dust Caps to accompany its cable jacks and jack receptacles. These units are available with or without mounting chains for attachment to adjacent panels or chassis. Dust Caps prevent the exposed connector mating ends from becoming dirty, physically damaged, or shorted.

"ConheX" Shorting Plugs provide a DC short circuit at normally open circuited, connector mating ends. The Shorting Plugs are available in 50 and 75 ohm sizes, Screw-on, Snap-on and Slide-on mating engagements and with or without mounting chains.

50-001-4110*

DUST CAPS

50 OHM ENGAGEMENT
Screw-On 50-001-0010
Snap-On 51-001-0010
Slide-On 52-001-0010

75 OHM ENGAGEMENT
Screw-On 50-101-0010
Snap-On 51-101-0010
Slide-On 52-101-0010

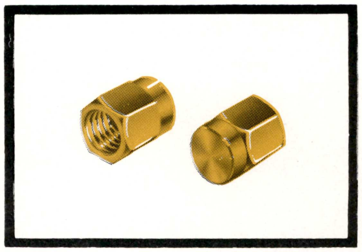

50-001-0020

SHORTING PLUGS

50 OHM ENGAGEMENT
Screw-On 50-001-0020
Snap-On 51-001-0020
Slide-On 52-001-0020

75 OHM ENGAGEMENT
Screw-On 50-101-0020
Snap-On 51-101-0020
Slide-On 52-101-0020

*These Dust Caps and Shorting Plugs are normally supplied without retaining chains. They can be supplied with chains by replacing the zeros in the sixth and seventh digits with "41". (i.e.: 50-001-**41**10 or 50-001-**41**20).

COMPLETELY ASSEMBLED RF CABLES

Sealectro maintains a complete rf cable assembly department incorporating engineering, design, assembly, and testing facilities. These services assure the customer of 100% electrical and mechanical performance to specifications along with quoted, guaranteed costing.

CUSTOM CABLE ASSEMBLIES

Custom cable assemblies are supplied to the exact customer requirements and specifications. Sealectro can design such assemblies for customer approval, or work to drawings and specifications supplied by customer. In either situation, every assembly is guaranteed 100%. Complete assemblies may be made with semi-rigid cable, or flexible braided shield cable. Choice of connectors incorporates all generic types, combinations of various types, or specials. Special electrical characteristics such as phase matching can also be specified. For detailed design and price quotation, submit your requirements to your local Sealectro representative, or directly to Sealectro.

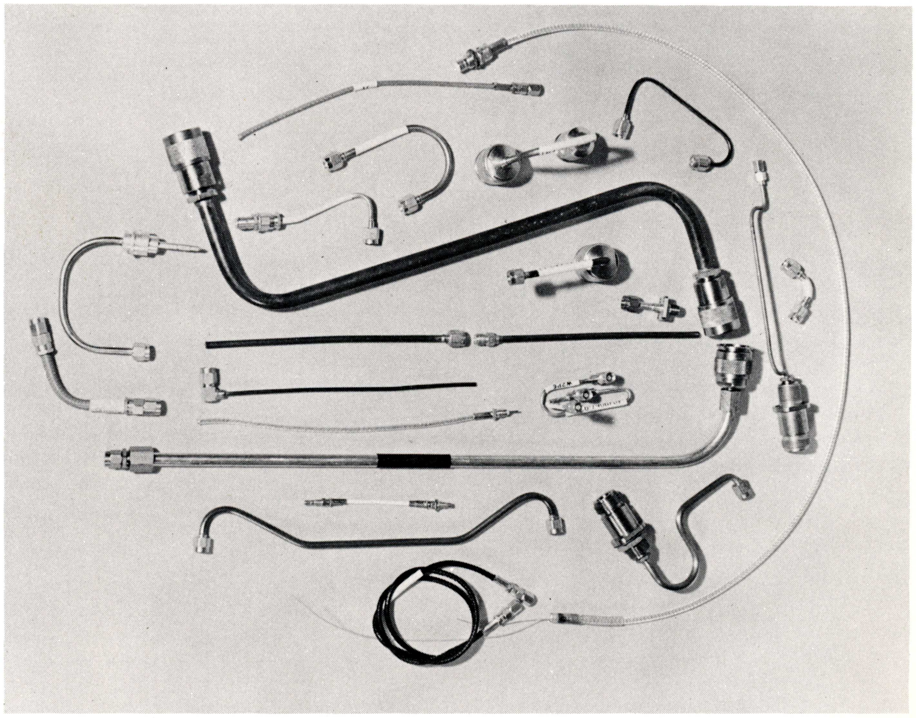

STANDARD CABLE ASSEMBLIES

Standard cable assemblies listed below are offered to provide off-the-shelf availability for production as well as prototype requirements. These cables can be supplied with markers on special order.

GENERAL SPECIFICATIONS
Cable: RG-188/U
Cable Attachment: Field serviceable
Mating Engagement: Screw-on or Snap-on
Length Tolerance: XX +1/8" or +1%, whichever is greater.

	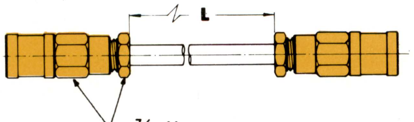 STRAIGHT PLUG — STRAIGHT PLUG		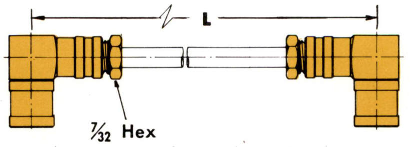 RIGHT ANGLE PLUG — RIGHT ANGLE PLUG		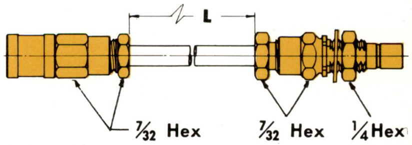 STRAIGHT PLUG — BULKHEAD JACK	
"L" DIM.	SCREW-ON MIL-C-39012 SERIES SMC	SNAP-ON MIL-C-39012 SERIES SMB	SCREW-ON MIL-C-39012 SERIES SMC	SNAP-ON MIL-C-39012 SERIES SMB	SCREW-ON MIL-C-39012 SERIES SMC	SNAP-ON MIL-C-39012 SERIES SMB
6"	69-188-1250	69-188-1280	69-188-1260	69-188-1290	69-188-1270	69-188-1300
12"	69-188-1251	69-188-1281	69-188-1261	69-188-1291	69-188-1271	69-188-1301
18"	69-188-1252	69-188-1282	69-188-1262	69-188-1292	69-188-1272	69-188-1302
24"	69-188-1253	69-188-1283	69-188-1263	69-188-1293	69-188-1273	69-188-1303
30"	69-188-1254	69-188-1284	69-188-1264	69-188-1294	69-188-1274	69-188-1304
36"	69-188-1255	69-188-1285	69-188-1265	69-188-1295	69-188-1275	69-188-1305
42"	69-188-1256	69-188-1286	69-188-1266	69-188-1296	69-188-1276	69-188-1306
48"	69-188-1257	69-188-1287	69-188-1267	69-188-1297	69-188-1277	69-188-1307
60"	69-188-1258	69-188-1288	69-188-1268	69-188-1298	69-188-1278	69-188-1308
72"	69-188-1259	69-188-1289	69-188-1269	69-188-1299	69-188-1279	69-188-1309

MOUNTING INFORMATION

RECOMMENDED MOUNTING HOLE DIMENSIONS

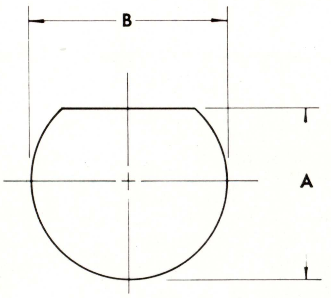

"D" HOLE

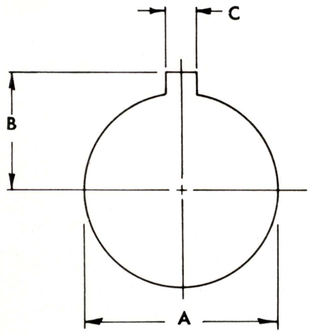

KEYWAY

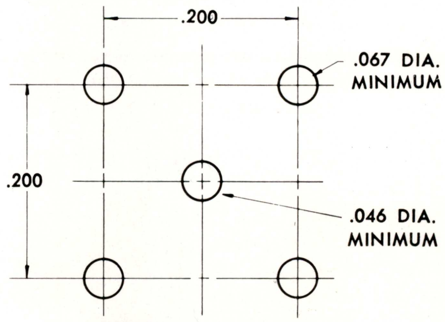

PRINTED CIRCUIT

THREAD SIZE	"D" HOLE (0000) A +.005 −.000	"D" HOLE (0000) B +.005 −.000	KEYWAY (4300) A +.005 −.000	KEYWAY (4300) B MIN.	KEYWAY (4300) C +.010 −.000
#10-32, UNF-2A	.177	.195	.195	.135	.045
¼-32, UNEF-2A	.233	.265	.265	.171	.045
9⁄32-40, UNS-2A	.265	.290	.290	.205	.045
5⁄16-32, UNEF-2A	.297	.330	.320	.205	.045
⅜-32, UNEF-2A	.359	.390	.390	.265	.045
7⁄16-28, UNEF-2A	.410	.469	.445	.300	.045
½-28, UNEF-2A	.480	.515			
⅝-24, UNEF-2A	.600	.640			

Note: Most standard items shown throughout this catalog which bear the "-0000" description, mount in D-type holes. For those units which mount in round holes, the diameter of the hole should be equal to the "B" dimension shown for D-type holes.
Receptacles bearing the description "-4300" mount in Keyway-type holes.

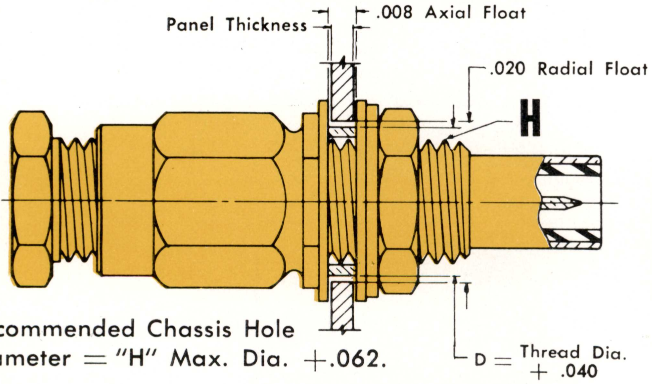

Recommended Chassis Hole Diameter = "H" Max. Dia. +.062.

FLOAT MOUNTS

Snap-on or Slide-on bulkhead mounted connectors can be provided with "float" to facilitate alignment during engagement.

Panel Thickness	Bushing Length	PART NUMBER Last Four Digits of — 0000 Part No.	PART NUMBER Last Four Digits of — 3196 Part No.
.032	.040	— 4210	— 9039
.062	.070	— 4220	— 9040
.093	.100	— 4230	— 9041

Example: 52-010-4220 Straight Bulkhead Cable Jack P/N52-010-0000 with float for .062 Panel.

NOTE: Also available in individual kits for conversion of standard bulkhead units.

MOUNTING BRACKETS FOR "T" ADAPTORS AND JUNCTION BLOCKS

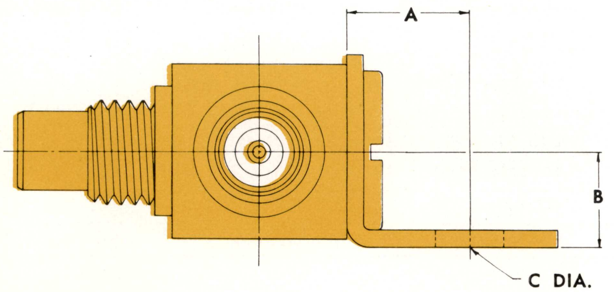

	BRACKET DIMENSIONS A	B	C	WIDTH
50 OHM SERIES	.22	.19	.120	.31
75 OHM SERIES	.22	.22	.120	.38

To order a unit with a mounting bracket, replace the "-0000" description with "-4800", or the "-3196" description with "-9043". To add a bracket to parts other than "-0000" or "-3196" contact factory for part number.

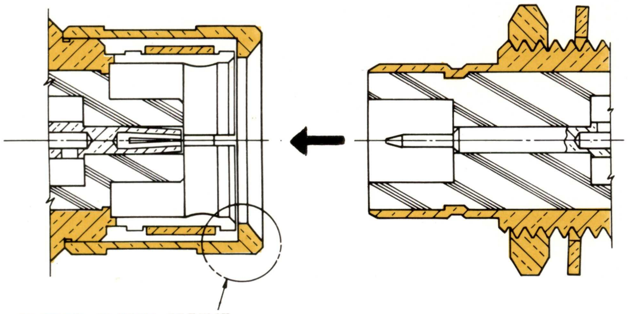

GUIDED ENTRY SLEEVE

Sealectro offers a guided entry sleeve for both Slide-On and Snap-On type plugs. This is a factory offered option which is specifically designed to facilitate easier and more dependable multiple connector mating. The long chamfered entry on the connector sleeve compensates for accumulated tolerance buildups in rack and panel, or modular interfaces on center-to-center dimensions. The guided entry aligns the mating components and prevents damage of the connectors due to misalignment. To order, the 6th and 7th digit in the part number should be 27. Example: 52-010-0000 becomes 52-010-**27**00.

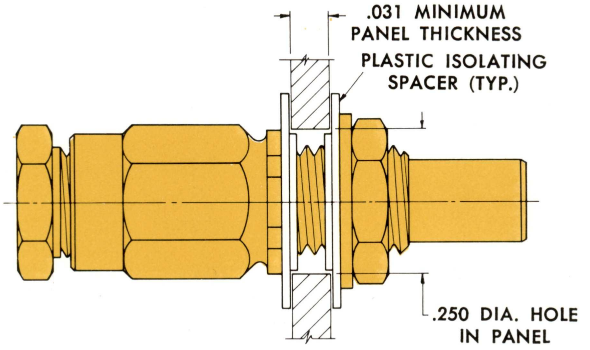

INSULATED PANEL MOUNT

For applications requiring non-grounded feedthrough coaxial connections, Sealectro supplies nylon washer kits for isolating the connector body from the mounting panel. Contact factory for further information.

PLATING OPTIONS

The standard connectors shown throughout this catalog are gold plated in accordance with MIL-C-39012. However, unique applications sometime require some plating other than gold. To order a unit with one of these plating options, contact our Sales Engineers with your requirements.

LOCKWIRE PROVISIONS

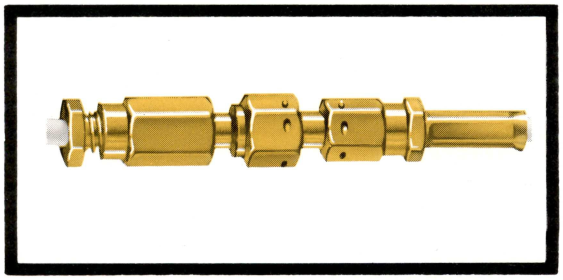

50-007-2710 50-025-2010

Lockwire holes can be provided on most ConheX connectors. In most cases these holes accept #23 AWG or smaller locking wire. To order a unit with lockwire holes, substitute the numbers shown for the "-0000" or "-3196", description in the basic part number (see above). To add lockwire holes to parts other than "-0000" or "-3196", contact factory for proper part number.

		BASE NUMBER SUFFIX	
		-0000	-3196
L'wire holes in coupling nut	=	2710	9023
L'wire holes in locknut	=	2810	9021
L'wire holes in body	=	2010	9022
L'wire holes in mounting flange*	=	2010	9022

*Applies to front-mount receptacles.

INTERFACE GASKETS

An interface gasket can be provided for use in the mating end to prevent moisture from entering the interface (See moisture resistance specification on Page 7). These gaskets are designed for use on "ConheX" PLUGS only (N, BNC, TNC and dust caps are supplied with an integral interface gasket). To order a plug with an interface gasket, substitute "-5000" for the "-0000" and "-9004" for the "-3196" description in the basic part number (see above). To add an interface gasket to parts other than "-0000" or "-3196", contact factory for proper part number.

ASSEMBLY

TORQUE WRENCH

PART NO.	DIM. "A"	
50-000-0854-08	.218″	60-70 in. ozs.
50-000-2854-08	.218″	90-100 in. ozs.
50-000-0854-09	.234″	60-70 in. ozs.
50-000-2854-09	.234″	90-100 in. ozs.
50-000-1854-10	.250″	80-90 in. ozs.
50-000-4854-12	.312″	8.5 ±.5 in. lbs.
50-000-6854-12	.312″	25.5 ±.5 in. lbs.
50-000-1854-13	.343″	80-90 in. ozs.
50-000-4854-14	.375″	140-150 in. ozs.

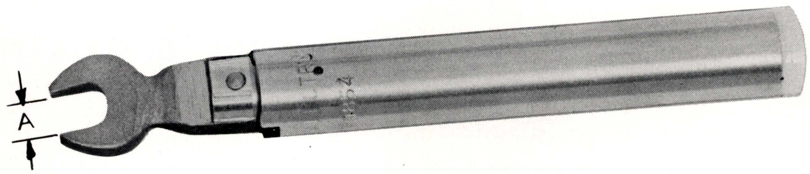

RECOMMENDED TORQUE VALUES

	50 OHM	75 OHM
Clamp-type, clamp nuts	90-100 in. ozs.	140-150 in. ozs.
Crimp-type, rear bodies	90-100 in. ozs.	140-150 in. ozs.
Coupling Nuts (Screw-on only)	60-70 in. ozs.	80-90 in. ozs.
Locknuts	80-90 in. ozs.	140-150 in. ozs.
Right-angle sub-assemblies	90-100 in. ozs.	140-150 in. ozs.

OUTER FERRULE CRIMP TOOLS

Designed for fast, easy, precise assembly of "Conhex" Crimp on connectors, the tool is so designed that a complete crimping operation must be made before the tool releases. It permits the assembly of connectors to cable by unskilled help. The stop tolerance on the crimping action eliminates distortion of the cable dielectric, thus maintaining optimum electrical characteristics in the finished assembly. The finished assembly is stronger than the cable itself. The all-steel construction of the tool ensures a long reliable service life.

Two complete tools are available from Sealectro. Each consists of the basic frame (Buchanan P/N6 12648) with the hex dies shown in the chart below.

Additional hex die assemblies for crimping other cables are also available.

Hex die assemblies are easily changed without the use of tools.

Determine what hex dies are required for your particular cable by consulting the cable chart. (Page 11)

	SEALECTRO PT. NUMBER	HEX DIE SIZES .105	.128	.151	.178	.213	.255	.268	BUCHANAN PART NUMBER
FRAME ONLY	50-000-0000								612648
COMPLETE TOOL NUMBER	50-000-0090	*	*		*				613873
	50-000-0091		*			*			613875
ADDITIONAL HEX DIE ASSEMBLIES	50-000-0290	*	*		*				613874
	50-000-0291		*			*			613876
	50-000-0292			*	*				615550
	50-000-0293						*	*	615554
	50-000-0294				*		*		615552
	50-000-0295					*	*		614557

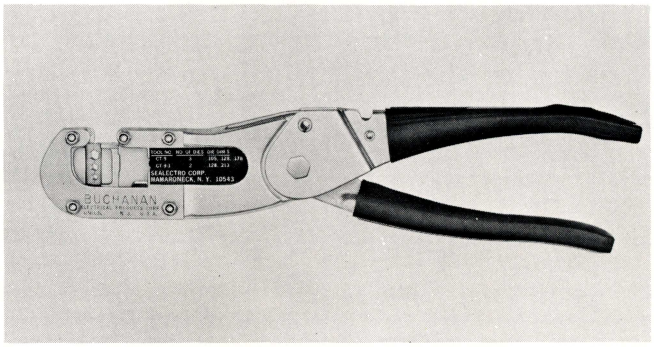

HEX DIE SIZES IN 50-000-0091

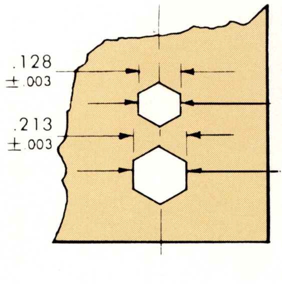

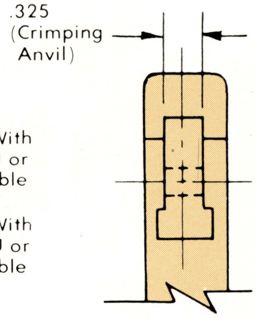

WIDTH OF DIE

ASSEMBLY INSTRUCTIONS

Space prohibits the listing of the procedures for assembling the many "Conhex" connectors to coaxial cables. A complete assembly instruction cross reference is available upon request. Assembly instructions for any connector in particular can be obtained by contacting the factory.

CONVERSION TABLES

FREQUENCY LETTER BANDS

Letter Designation	Frequency Range	Wavelength In Centimeters
HF	3-30 MHz	10000. - 1000
VHF	30-300 MHz	1000. - 100
UHF	300-1000 MHz	100. - 30
L	1.0-2.0 GHz	30. - 15
S	2.0-4.0 GHz	15. - 7.5
C	4.0-8.0 GHz	7.5 - 3.75
X	8.0-12.0 GHz	3.75 - 2.5
Ku	12.0-18.0 GHz	2.5 - 1.67
K	18.0-27.0 GHz	1.67 - 1.11
Ka	27.0-40.0 GHz	1.11 - 0.75
mm	40-300 GHz	0.75 - 0.1

VSWR CONVERSIONS

VSWR to Return Loss					
VSWR	Reflection Coefficient	Return Loss, dB	VSWR	Reflection Coefficient	Return Loss, dB
1.01	.0050	46.06	1.16	.0741	22.61
1.02	.0099	40.09	1.17	.0783	22.12
1.03	.0148	36.61	1.18	.0826	21.66
1.04	.0196	34.15	1.19	.0868	21.23
1.05	.0244	32.26	1.20	.0909	20.83
1.06	.0291	30.71	1.21	.0950	20.44
1.07	.0338	29.42	1.22	.0991	20.08
1.08	.0385	28.30	1.23	.1031	19.73
1.09	.0431	27.32	1.24	.1071	19.40
1.10	.0476	26.44	1.25	.1111	19.08
1.11	.0521	25.66	1.26	.1150	18.78
1.12	.0566	24.94	1.27	.1189	18.49
1.13	.0610	24.29	1.28	.1228	18.22
1.14	.0654	23.69	1.29	.1266	17.95
1.15	.0698	23.13	1.30	.1304	17.69

Return Loss to VSWR					
Return Loss, dB	Reflection Coefficient	VSWR	Return Loss, dB	Reflection Coefficient	VSWR
40	.0100	1.020	25	.0562	1.119
39	.0112	1.023	24	.0631	1.135
38	.0126	1.026	23	.0708	1.152
37	.0141	1.029	22	.0794	1.173
36	.0158	1.032	21	.0891	1.196
35	.0178	1.036	20	.1000	1.222
34	.0200	1.041	19	.1122	1.253
33	.0224	1.046	18	.1259	1.288
32	.0251	1.052	17	.1413	1.329
31	.0282	1.058	16	.1585	1.377
30	.0316	1.065	15	.1778	1.433
29	.0355	1.074	14	.1995	1.499
28	.0398	1.083	13	.2239	1.577
27	.0447	1.094	12	.2512	1.671
26	.0501	1.106	11	.2818	1.785

CONVERSION TABLES

INCHES TO MILLIMETERS

Inches	Milli-meters	Inches	Milli-meters	Inches	Milli-meters
0.001	0.025	0.290	7.37	0.660	16.76
0.002	0.051	0.300	7.62	0.670	17.02
0.003	0.076	0.310	7.87	0.680	17.27
0.004	0.102	0.320	8.13	0.690	17.53
0.005	0.127	0.330	8.38	0.700	17.78
0.006	0.152	0.340	8.64	0.710	18.03
0.007	0.178	0.350	8.89	0.720	18.29
0.008	0.203	0.360	9.14	0.730	18.54
0.009	0.229	0.370	9.40	0.740	18.80
0.010	0.254	0.380	9.65	0.750	19.05
0.020	0.508	0.390	9.91	0.760	19.30
0.030	0.762	0.400	10.16	.0770	19.56
0.040	1.016	0.410	10.41	0.780	19.81
0.050	1.270	0.420	10.67	0.790	20.07
0.060	1.524	0.430	10.92	0.800	20.32
0.070	1.778	0.440	11.18	0.810	20.57
0.080	2.032	0.450	11.43	0.820	20.83
0.090	2.286	0.460	11.68	0.830	21.08
0.100	2.540	0.470	11.94	0.840	21.34
0.110	2.794	0.480	12.19	0.850	21.59
0.120	3.048	0.490	12.45	0.860	21.84
0.130	3.302	0.500	12.70	0.870	22.10
0.140	3.56	0.510	12.95	0.880	22.35
0.150	3.81	0.520	13.21	0.890	22.61
0.160	4.06	0.530	13.46	0.900	22.86
0.170	4.32	0.540	13.72	0.910	23.11
0.180	4.57	0.550	13.97	0.920	23.37
0.190	4.83	0.560	14.22	0.930	23.62
0.200	5.08	0.570	14.48	0.940	23.88
0.210	5.33	0.580	14.73	0.950	24.13
0.220	5.59	0.590	14.99	0.960	24.38
0.230	5.84	0.600	15.24	0.970	24.64
0.240	6.10	0.610	15.49	0.980	24.89
0.250	6.35	0.620	15.75	0.990	25.15
0.260	6.60	0.630	16.00	1.000	25.40
0.270	6.86	0.640	16.25	....	....
0.280	7.11	0.650	16.51	....	....

TEMPERATURE °C TO °F

°C	°F	°C	°F	°C	°F
−100	−148	+115	+239	+330	+626
− 95	−139	+120	+248	+335	+635
− 90	−130	+125	+257	+340	+644
− 85	−121	+130	+266	+345	+653
− 80	−112	+135	+275	+350	+662
− 75	−103	+140	+284	+355	+671
− 70	− 94	+145	+293	+360	+680
− 65	− 85	+150	+302	+365	+689
− 60	− 76	+155	+311	+370	+698
− 55	− 67	+160	+320	+375	+707
− 50	− 58	+165	+329	+380	+716
− 45	− 49	+170	+338	+385	+725
− 40	− 40	+175	+347	+390	+734
− 35	− 31	+180	+356	+395	+743
− 30	− 22	+185	+365	+400	+752
− 25	− 13	+190	+374	+405	+761
− 20	− 4	+195	+383	+410	+770
− 15	+ 5	+200	+392	+415	+779
− 10	+ 14	+205	+401	+420	+788
− 5	+ 23	+210	+410	+425	+797
0	+ 32	+215	+419	+430	+806
+ 5	+ 41	+220	+428	+435	+815
+ 10	+ 50	+225	+437	+440	+824
+ 15	+ 59	+230	+446	+445	+833
+ 20	+ 68	+235	+455	+450	+842
+ 25	+ 77	+240	+464	+455	+851
+ 30	+ 86	+245	+473	+460	+860
+ 35	+ 95	+250	+482	+465	+869
+ 40	+104	+255	+491	+470	+878
+ 45	+113	+260	+500	+475	+887
+ 50	+122	+265	+509	+480	+896
+ 55	+131	+270	+518	+485	+905
+ 60	+140	+275	+527	+490	+914
+ 65	+149	+280	+536	+495	+923
+ 70	+158	+285	+545	+500	+932
+ 75	+167	+290	+554	+505	+941
+ 80	+176	+295	+563	+510	+950
+ 85	+185	+300	+572	+515	+959
+ 90	+194	+305	+581	+520	+968
+ 95	+203	+310	+590	+525	+977
+100	+212	+315	+599	+530	+986
+105	+221	+320	+608	+535	+995
+110	+230	+325	+617		

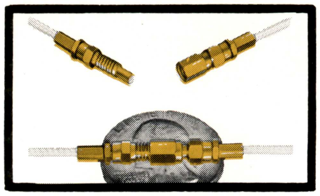

NanoheX®

MICROMINIATURE R.F. CONNECTORS

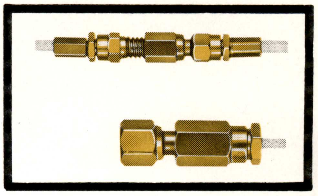

THE TROUBLE FREE MICROMINIATURE CONNECTORS EVERYONE HAS BEEN WAITING FOR!

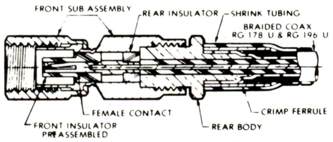

STRAIGHT CRIMP-TYPE PLUG

Sealectro's NanoheX Series have been designed to meet the demand for a smaller yet reliable microminiature connector with excellent electrical characteristics. The units are easily assembled to cable by your present production line personnel. Their small size is ideal for miniature solid state MIC applications where, until now, the size of the device has been limited by the size of available connectors which would meet the electrical as well as mechanical requirements.

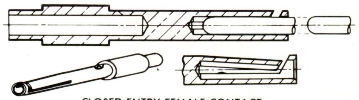
CLOSED ENTRY FEMALE CONTACT

TELESCOPING INTERFACE ENSURES PROPER MATING by first aligning metal bodies, then insulators, then contacts; Electrical performance is therefore maintained under thermal extremes! Engagement is similar to MIL-C-39012 Series SMB and SMC.

- CAPTIVATED CONTACTS simplify cable assembly! Contacts are precisely positioned for mating! See drawings above.
- CLOSED ENTRY FEMALE CONTACTS eliminates the possibility of mismating or damage from oversize test probes. See drawing above.
- SUPERIOR ELECTRICAL PERFORMANCE typical VSWR when used with .056" or .070" diameter semi-rigid cable is 1.30:1 maximum up to 12.4 GHz! When used with RG-178/U or RG- 196/U braided cable, VSWR is 1.35:1 maximum up to 12.4 GHz.
- AVAILABILITY ensured by minimum stocks maintained at the factory.
- SMALL-SIZE CONNECTORS are constructed of .156 hex, allowing size reductions of systems and circuits.
- MATING ENGAGEMENTS available include Screw-On, Snap-On and Slide-On.
- CONFIGURATIONS available include straight and right angle plugs and jacks, bulkhead and panel cable plugs and jacks and printed wiring board or bulkhead mounting receptacles. The NanoheX catalog contains more than 100 units to choose from.
- ADAPTORS to Sealectro's "SRM" Series, "ConheX" and APC-7 connectors are available from stock.
- CUSTOM CABLE ASSEMBLY facilities are at your disposal for designs requiring braided or semi-rigid coaxial cable.

For a copy of our new NanoheX catalog, fill in the reply card attached.

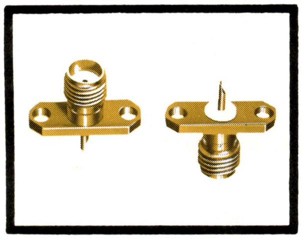

SMA®

MINIATURE STAINLESS STEEL CONNECTORS

PER MIL-C-39012, SERIES SMA

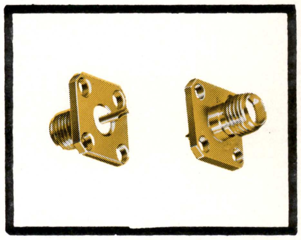

FEATURES

- Captivated Contacts
- Field Repairability
- Replaces OSM/BRM Types
- Fewer Components
- Faster Assembly
- Over 200 Catalog Items
- Distributor Stocked

The Sealectro "SMA" Series of miniature R.F. connectors has been specifically designed to meet the most stringent requirements of sophisticated Space, Aviation, Military and Industrial systems. From DC to 18 GHz, they combine high performance with assembly ease. The units are completely compatible with the OSM/BRM types and all similar connectors conforming to MIL-C-39012 Series SMA. "SMA" connectors and components exhibit the following distinct advantages over similar designs:

- IMPROVED INTERFACE
  Mil-Spec interface tolerances are reduced up to 50% to improve electrical and mechanical reliability and performance.
- REDUCED ASSEMBLY TIME
  Crimp-Type units feature pre-assembled front insulators and one-piece rear bodies — FIVE PARTS TOTAL (Sub-assembly, contact, rear insulator, rear body, crimp ferrule).
- FIELD REPAIRABILITY
  Field repairable units for braided coaxial cable. Field repairable units for semi-rigid coaxial cable in both Clamp-Type and Solder-Clamp-Type.

For a copy of our new SMA catalog, fill in the reply card attached.

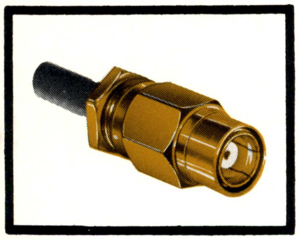

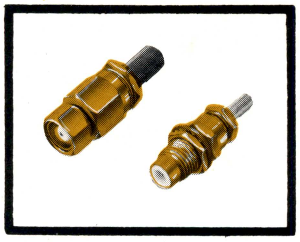

MINIATURE R.F. CONNECTORS

RUGGED, RELIABLE AND REPEATABLE

Sealectro's "Ƶ" Series was first developed in 1964 to solve a particular microwave transmission problem.

Since that time we have developed what has been accepted as the most reliable and repeatable high frequency connector yet to be offered.

Unlike the SMA connector, which has a butt-type interface, the Ƶ Series features an interface with overlapping dielectrics and bodies which telescope .120". This ensures proper mating by first aligning metal bodies, then insulators, then contacts. The integrity of the connection is therefore maintained under thermal extremes. Because of the engagement method employed, repeatability is virtually assured under all but the most severe conditions. Only one-half inch-pound of torque is required to make a reliable connection, where the SMA type requires seven to ten inch pounds.

The configurations available in the Ƶ series are the same as those shown in this ConheX catalog — literally hundreds. Mating engagements available include Screw-On, Snap-On, and Slide-On.

Electrical Characteristics are comparable to the SMA types to 12.4 GHz. When the reliability and repeatability factors of the Ƶ Series are considered, the Ƶ Series far and away outperforms the SMA connector.

Cable connectors are designed for the larger sizes of coaxial cable such as: RG-142B/U, RG-223/U and .141" semi-rigid. They are available in Clamp-Type or Crimp-Type for braided cables, and Clamp-Type or Solder-Clamp-Type for semi-rigid cables.

Sealectro Between-Series Adaptors.

Sealectro provides the widest choice of between-series adaptors in the industry. They are designed for use in design and laboratory work in situations where the most efficient transfer of r.f. signals is required between various types of connectors. Sealectro adaptors are widely used as a component within equipment where the external connector interface must adapt to a more appropriate internal connector configuration.

All Sealectro between-series adaptors are precisely designed and manufactured to minimize transition losses.

- SMA to SMB/SMC
- SMA to BNC
- SMA to N
- SMA to TNC
- SMB/SMC to TNC
- SMB/SMC to GR-874
- SMB/SMC to APC-7
- SMA to APC-7
- SMA to GR-900
- SMA to GR-874
- SMB/SMC to BNC
- SMB/SMC to N
- SMB/SMC to GR-900

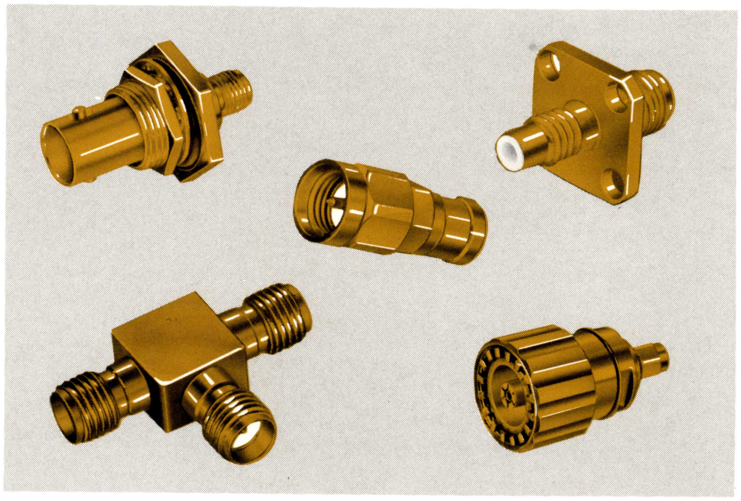

Sealectro N, BNC, TNC Connectors.

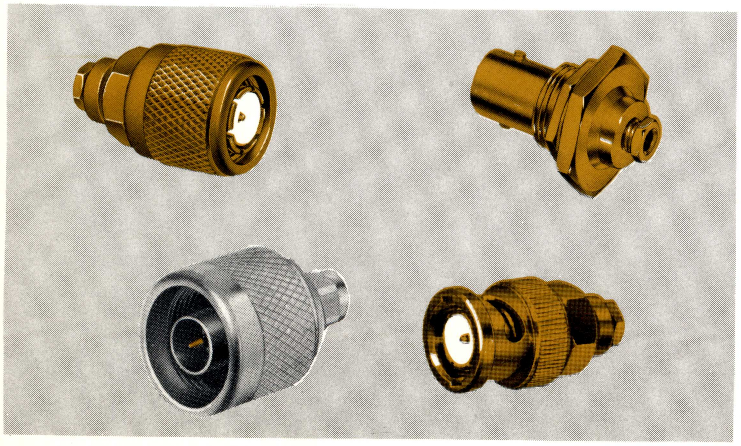

Sealectro N, BNC, and TNC Coaxial connectors provide a means to mate with these configurations on front panels while employing the popular sub-miniature cable sizes. They are specifically designed for use on RG-188/U, RG-195/U, RG-196/U braided cables and .141 semi-rigid cable. In addition to these 50-ohm units, they are also available in 75-ohm interface configurations.

All Sealectro Type N, BNC, and TNC connectors incorporate the same precise machining and assembly qualities which have made Sealectro the standard of the world in sub-miniature connectors.

In all three series, units are available as plugs for cable mounting, and bulkhead mounting jacks. Semi-rigid cable units are field-serviceable, featuring solder-clamp cable attachment.

CON HEX®

subminiature R.F. connectors

RF COMPONENTS DIVISION

SEALECTRO®

SEALECTRO CORPORATION

MAMARONECK, N. Y. 10543 PHONE 914-698-5600 TWX 710-566-1110

SEALECTRO WEST.

14011 Ventura Blvd.
Suite 215
Sherman Oaks, Ca. 91423
Phone 213-990-8131

1901 Old Middlefield Way
Suite 19
Mountain View, Ca. 94043
Phone 415-965-1212

SEALECTRO LTD.

Walton Road
Portsmouth, Hants, England

SEALECTRO S.A.

Zone Industrielle De Toulon E
83087 Toulon Cedex, France

SC-101-6-80

Printed in U.S